DRAINVAC®
Cleaning Systems

OWNER'S MANUAL

DRY SEPARATOR

MAN.SEPAINOX.AN
PRINTED IN CANADA 01/26

TABLE OF CONTENTS

IMPORTANT SAFETY INSTRUCTIONS

When using an electronic appliance, basic safety precautions should always be followed. Read all guidelines before operating the unit.

To reduce risk of fire, electric discharges or injuries:

- Use this vacuum only for its intended use as described in this manual. (Use of attachments not recommended by the manufacturer may cause fire, electric shock, injury or damage to system components.)
- Do not pick up anything that is burning or smoking, such as cigarettes, matches, or hot ashes.
- Do not pick up any flammable liquids or combustible materials (gasoline, fuel, diesel) hot debris, waste solvents (paint or other), explosive materials that would cause harm to the vacuum cleaner.
- Avoid picking up hard or sharp objects to prevent damaging or block the hose and the plastic pipes.
- Do not put any object into openings. Do not use if an opening is blocked. Keep free of dust, lint, hair and anything that may reduce airflow/suction. Lack of air flow will cause the motor to overheat.
- This vacuum cleaner creates suction. Keep hair, face, fingers, all body parts and loose clothing away from any openings.
- Never handle plug, cord or power units with wet hands.

By overlooking safety rules, you might risk putting your health in danger and to those who surround you!

DRAINVAC DISCLAIMS ANY RESPONSIBILITY SHOULD YOU INFRINGE UPON THESE GUIDELINES.

SAVE THESE INSTRUCTIONS

INTRODUCTION 4

REGISTRATION 4

FUNCTION

SEPARATOR FOR LARGE DEBRIS / FINE DUST 5

START / STOP / UNCLOGGING SYSTEM 6

DEVICE TYPES 7-8

DEVICE DESCRIPTION 9-11

PREPARATION 12-13

UNIT INSTALLATION

A.1) FIX MAIN SEPARATOR (SEPA.INOX01) 14

B.1) FIX THE MAIN SEPARATOR (SEPA.INOX02) 15

B.2) PLACE THE CANISTER (SEPA.INOX02) 15

2) FIX THE SAFETY SEPARATOR 16

3) CONNECT THE AIR TANK 16

4) FIX THE MOTOR 17

SYSTEM INSTALLATION 17

PIPING INSTALLATION 18-20

MAINTENANCE PROCEDURES

CARTRIDGE FILTER / EXTERNAL MOTOR 21

DISASSEMBLE THE MOTOR AND ACCESS THE TURBINE 22

CLEANING THE TURBINE 22

DEEE DIRECTIVE 23

SUPPORT 23

INTRODUCTION

We would like to take this opportunity to thank you for your confidence and congratulate you on your choice of a Drainvac product. It's a wise investment that will give you many years of satisfaction. Drainvac central vacuum systems are based on a unique, patented concept. They are manufactured and tested at our factory by specially trained, qualified personnel. However, certain installation and operating procedures must be followed to achieve maximum efficiency and avoid unnecessary service calls. Please read the following carefully.

REGISTRATION

To register your Drainvac product, visit
https://www.drainvac.com/ca/en/client-support/register-your-drainvac/

First of all, we recommend that you complete this form before starting the installation process. If you have any questions or problems, please contact your nearest dealer. Your device profile will be needed to help you.

MODEL(S)* _____ and _____

SERIAL NUMBER(S)* _____ and _____

RETAILER NAME _____

DATE OF PURCHASE _____

* This information can be found on the metal label on the left of your device.

Metal label

FUNCTION

SEPARATOR FOR LARGE DEBRIS

SEPA.INOX01

Vacuumed waste is retained in the main separator, while volatile dust is captured in the secondary separator. When the system is switched off, the separator empties directly into the waste garbage can.

Watch the video sequence!

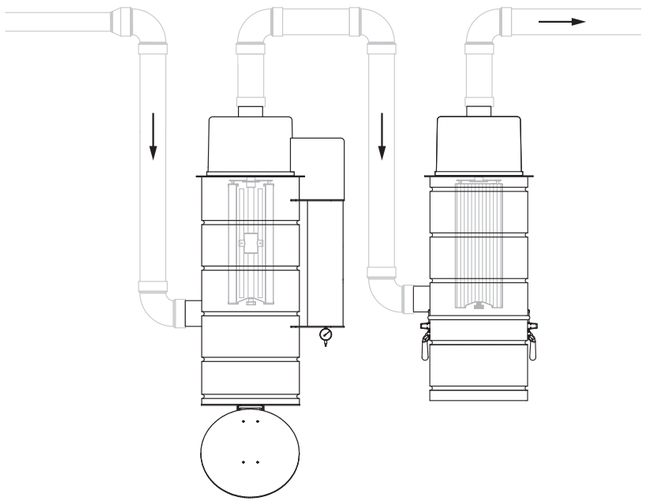

FINE DUST SEPARATOR

SEPA.INOX02

Vacuumed dust accumulates in the main separator, while volatile dust is captured in the secondary separator. When the system stops, the separator empties directly into a mobile container.

Watch the video sequence!

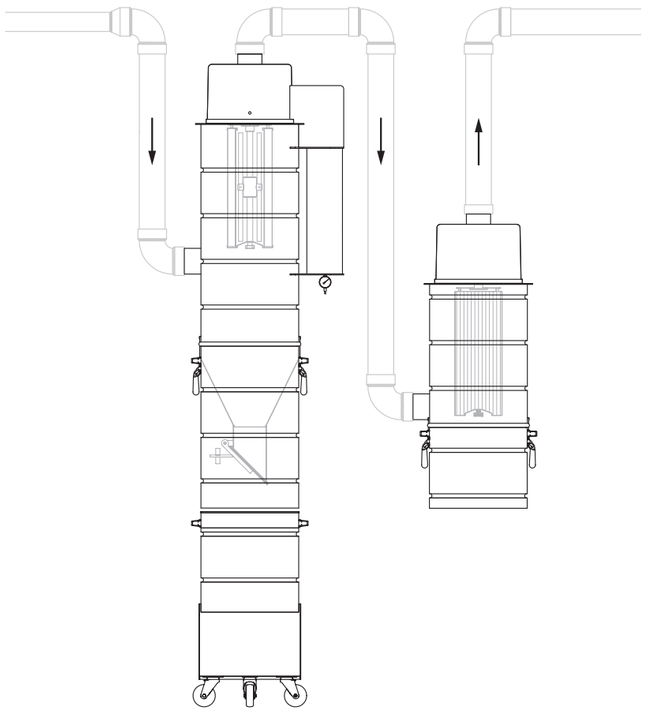

START

As soon as you connect the hose to the plug or switch on the system manually, the external motor starts up gradually and the cartridge filter is immediately cleaned by an unclogging system.

The coarse debris separator door (SEPA.INOX01) closes pneumatically and is kept closed by the suction power, while the flap of the fine dust separator (SEPA.INOX02) simply closes under the effect of the vacuum.

STOP

Unless you have a switch, disconnecting the hose from the outlet turns off the vacuum, which also triggers the cleaning system. The flap releases, allowing the vacuumed material to fall directly into the container below.

UNCLOGGING SYSTEM

The main separator is equipped with an unclogging system that cleans the cartridge filter. Each time the system is switched on or off, the cleaning process is triggered automatically: compressed air is blown from the inside to the outside through the cartridge, cleaning the entire filter.

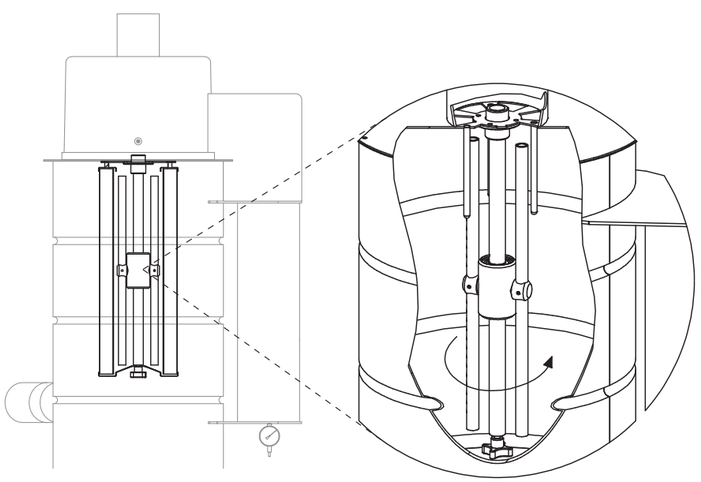

LARGE DEBRIS SEPARATOR

MODEL	SEPA.INOX01
WEIGHT	125 lb (57 kg)
CAPACITY	66 L (2,3 ft³)
DIMENSIONS (DOOR CLOSED)	17″ dia. x 56″ (432 mm x 1422 mm)

FINE DUST SEPARATOR

MODEL	SEPA.INOX02
WEIGHT	265 lb (111 kg)
CAPACITY	66 L (2,3 ft³)
DIMENSIONS	17″ dia. x 76″ (432 mm x 1930 mm)

SAFETY SEPARATOR

MODEL	SEPA.NOIR03	SEPA.INOX03
WEIGHT	265 lb (111 kg)	
CAPACITY	66 L (2,3 ft^3)	
DIMENSIONS	17″ dia. x 76″ (432 mm x 1930 mm)	

EXTERNAL MOTOR

MODEL	REGEN11HP	REGEN30HP.1
FREQUENCY	60 Hz	60 Hz
POWER	8 KW (11 HP)	22 KW (30 HP)
VOLTAGE	400-500Δ	400-500Δ
AMPS	15,1 A	36,5 A
MAX. FLOW	365 CFM	971 CFM
MAX. VACUUM	141 H_2O	130 H_2O
WEIGHT	226 lb (102,5 kg)	506 lb (229,5 kg)
HEIGHT	22,6″ (57,4 cm)	31,3″ (79,5 cm)
WIDTH	26,8″ (68 cm)	34,5″ (87,6 cm)
LENGTH	22,6″ (57,4 cm)	35,6″ (90,4 cm)

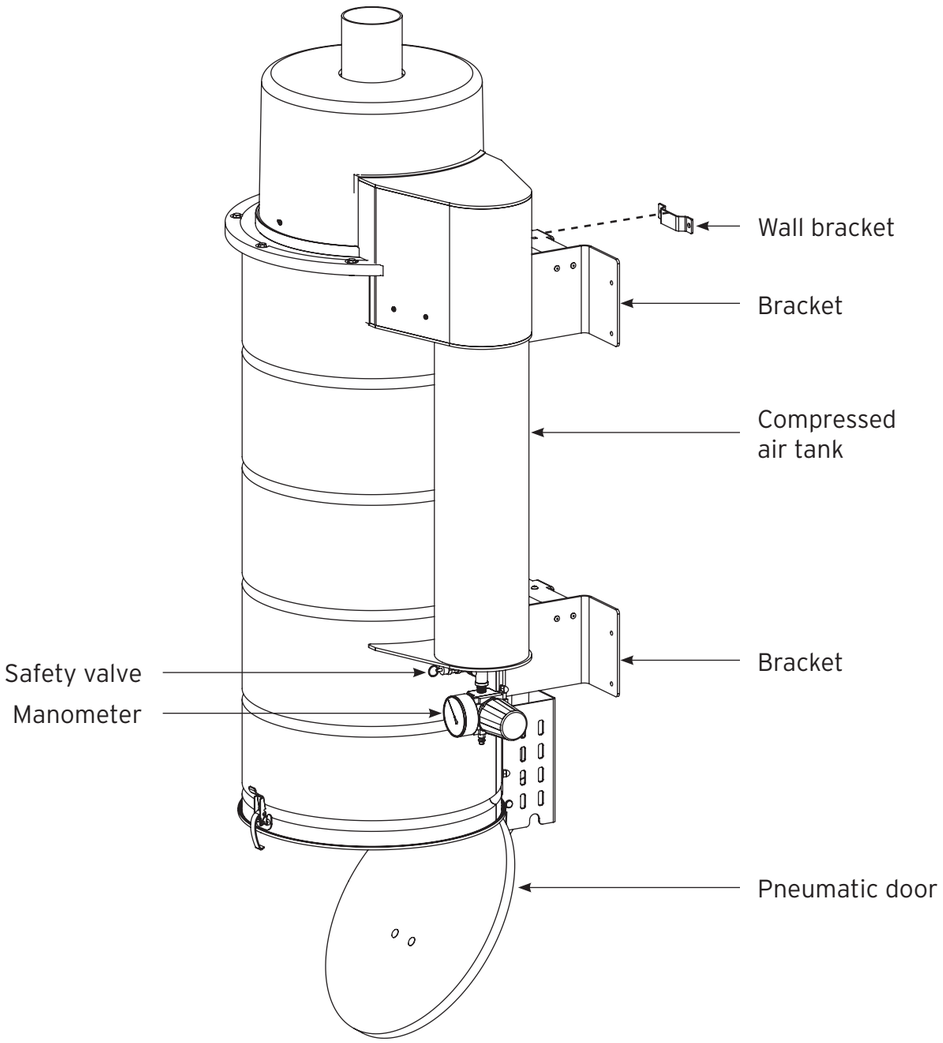

SEPA.INOX01

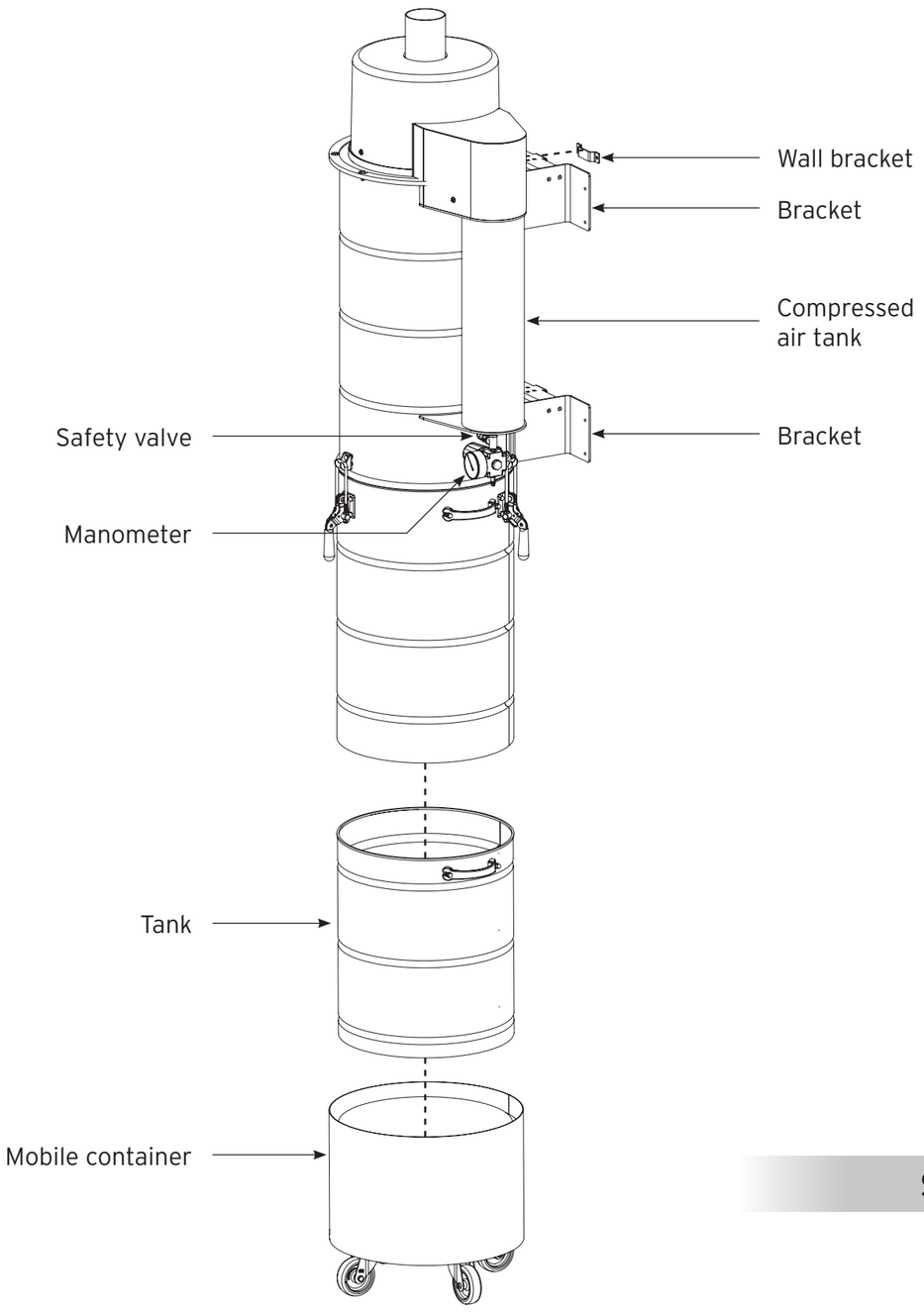

SEPA.INOX02

DEVICE DESCRIPTION

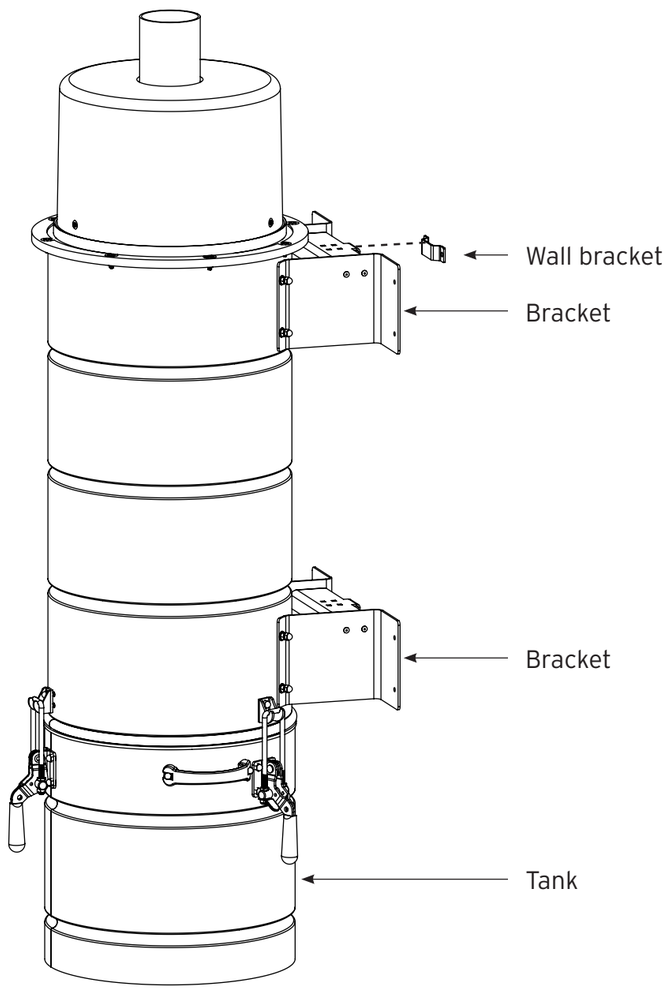

SEPA.NOIR03 / SEPA.INOX03

MINIMUM DIMENSIONS AND CLEARANCES

Minimum dimensions and clearancesIt's important to install separators so that they are easily accessible for maintenance and dust removal. Here are the recommended minimum clearances for installation:

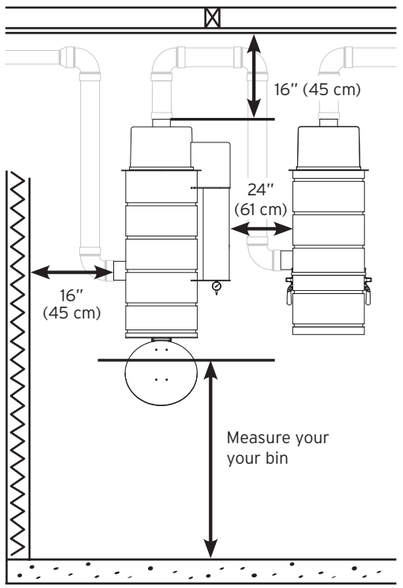

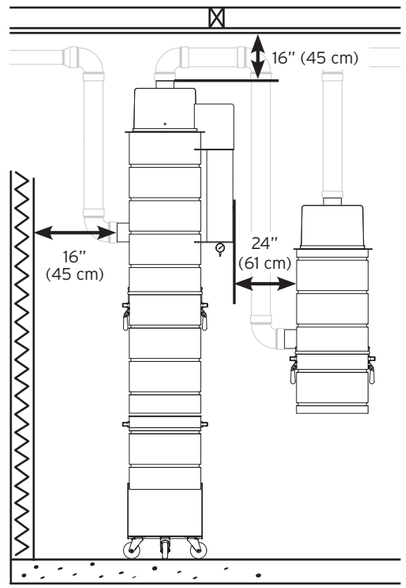

Ensure a 36" (1 m) clearance around the external motor. This distance is essential to facilitate your maintenance operations and, above all, to ensure that the motor can draw in and exhaust air optimally.

WARNING: failure to follow these instructions may require you to dismantle the motor for further maintenance.

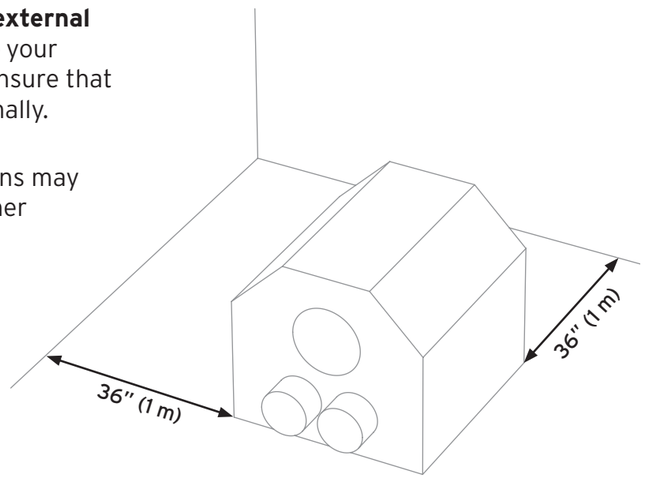

PREPARATION

TOOLS REQUIRED

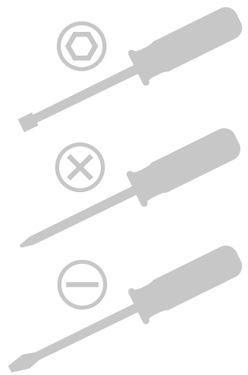

5/16" (8 mm) socket, star and flat-blade screwdrivers

Drill with 0.5" (12.5 mm) bit

Punch 2.25" (57 mm)

Cutting pliers

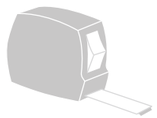

Measuring tape

Pipe cutter for PVC 2" (50 mm)

or

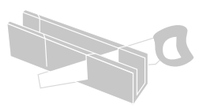

Box and mitre saw

To install the coarse dust separator (SEPA.INOX01), please start at step A.1.

To install the fine dust separator (SEPA.INOX02), please proceed to step B.1.

*** Please follow step A.1 to install SEPA.INOX01 or step B.1 to install SEPA.INOX02.**

A.1) FIX MAIN SEPARATOR
(SEPA.INOX01 MODEL)

- Measure the canister height to be placed under the separator.
- Knowing that the wall bracket is located at 38" (96.5 cm) from the bottom of the door (closed), add the two measurements to determine the location of the wall bracket.

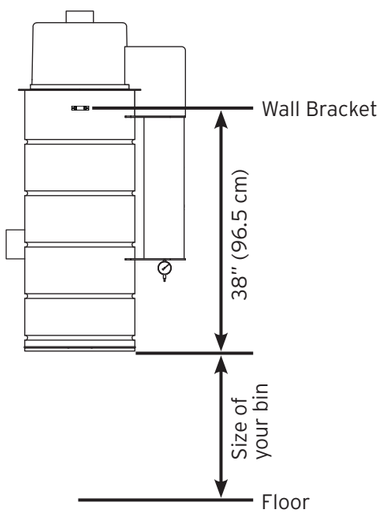

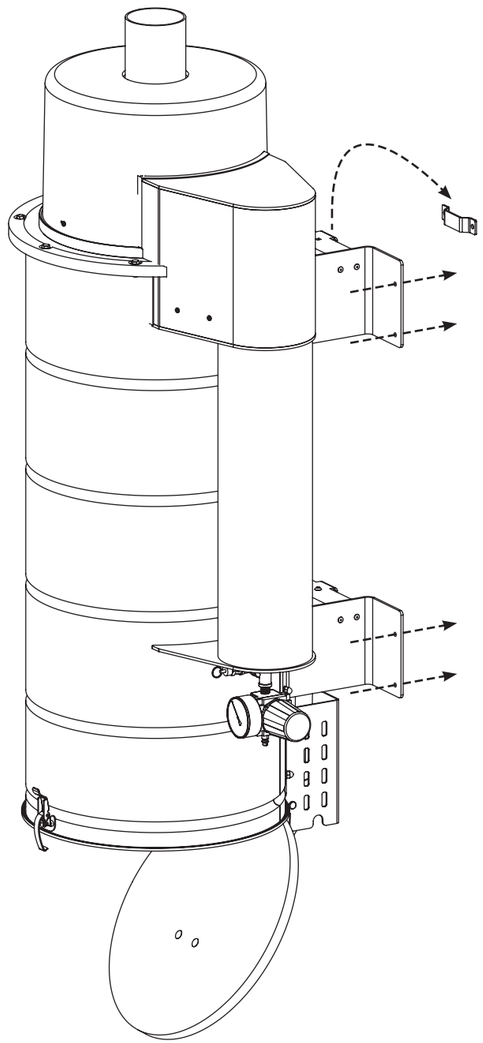

- Fix the bracket to the wall (screws not supplied).
- Lift and hang the separator on the wall bracket.
- Make sure the unit is upright, then fasten the unit's two side brackets with two screws on each side.

UNIT INSTALLATION

B.1) FIX THE MAIN SEPARATOR
(SEPA.INOX02 MODEL)

- Fix the wall bracket to the wall at 95" (241 cm) from the floor.
- Lift and hang the separator on the wall bracket.

Make sure the unit is upright, then fasten the unit's two side brackets with two screws on each side.

B.2) PLACE THE CANISTER

- Place the canister on the mobile base and move the latter directly under the separator.

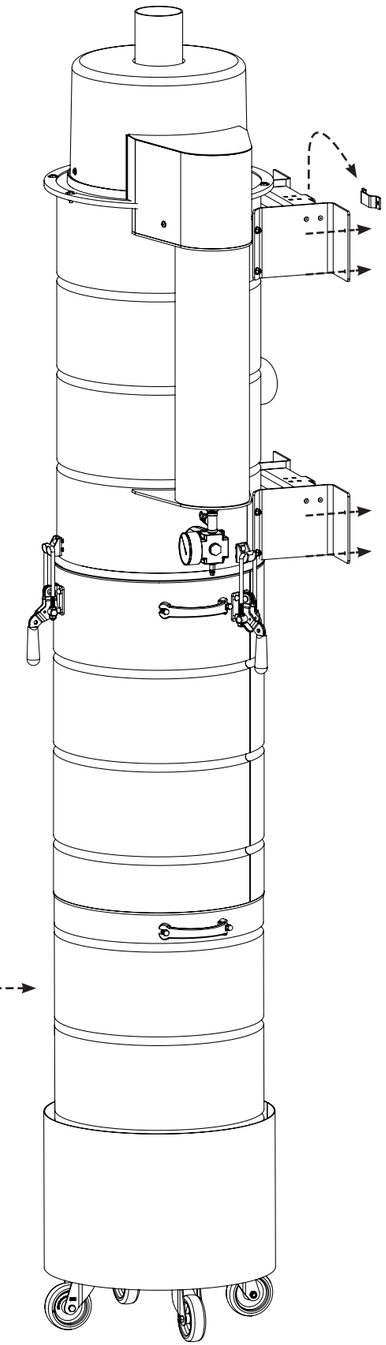

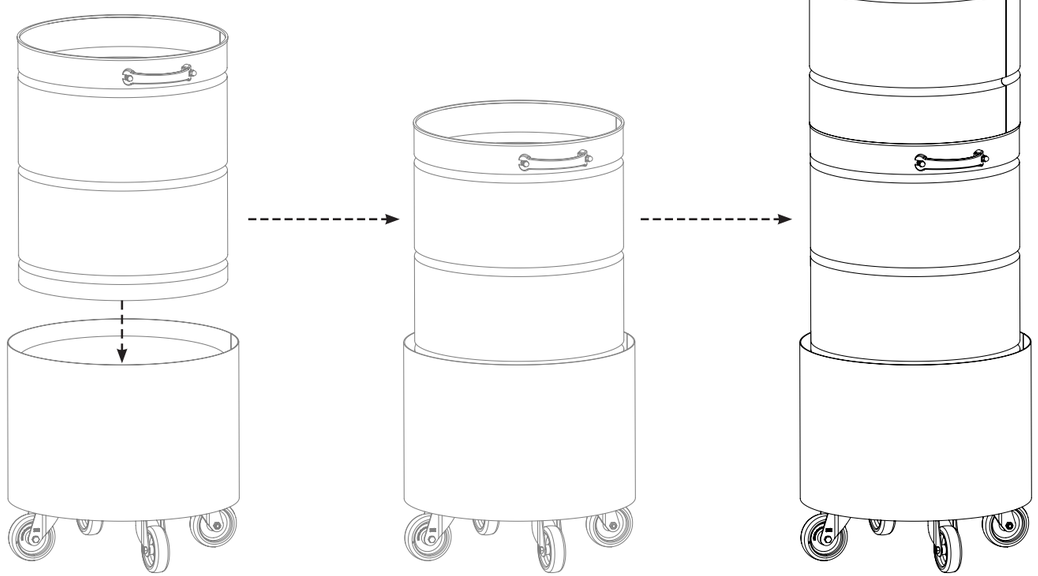

2) FIX THE SAFETY SEPARATOR

- Fix the wall bracket at the same height as the main separator.
- Lift and hang the separator on the wall bracket.
- Make sure it's straight, then secure the 2 brackets to the unit with 2 screws on each side.

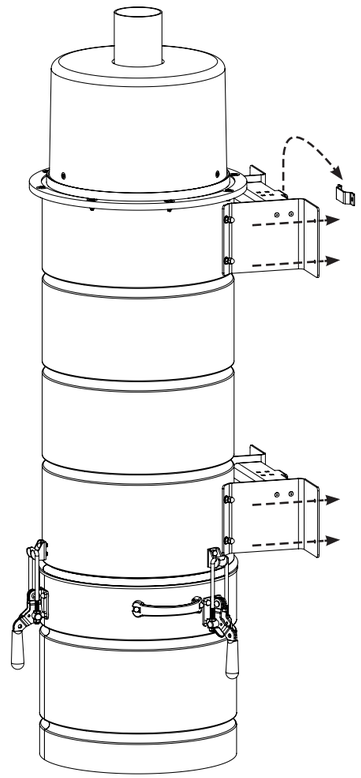

3) CONNECT THE AIR TANK

- Connect the tank to your air compressor.

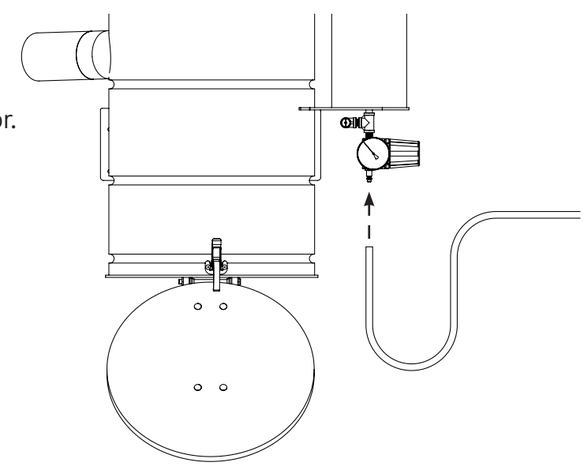

4) FIX THE MOTOR

Thanks to its stainless steel housing, the motor can be installed indoors or outdoors.

- Fix the motor on the floor at the desired location.

WARNING:

✓ **THE MOTOR MUST HAVE 1 m (36") CLEARANCE ALL AROUND.**

✓ **THE SIX MOUNTING HOLES MUST BE USED TO ANCHOR THE MOTOR TO THE FLOOR.**

SYSTEM INSTALLATION

Although each installation may vary, the diagram below illustrates a typical industrial system configuration. However, **it is imperative to comply with the location of the various elements.** The pinch valve assembly (A), emergency valve (B) and control panel (C) must all be installed indoors, while the motor (D) can be installed outdoors.

Please note that components A, B, C and D may differ from those shown in the diagram.

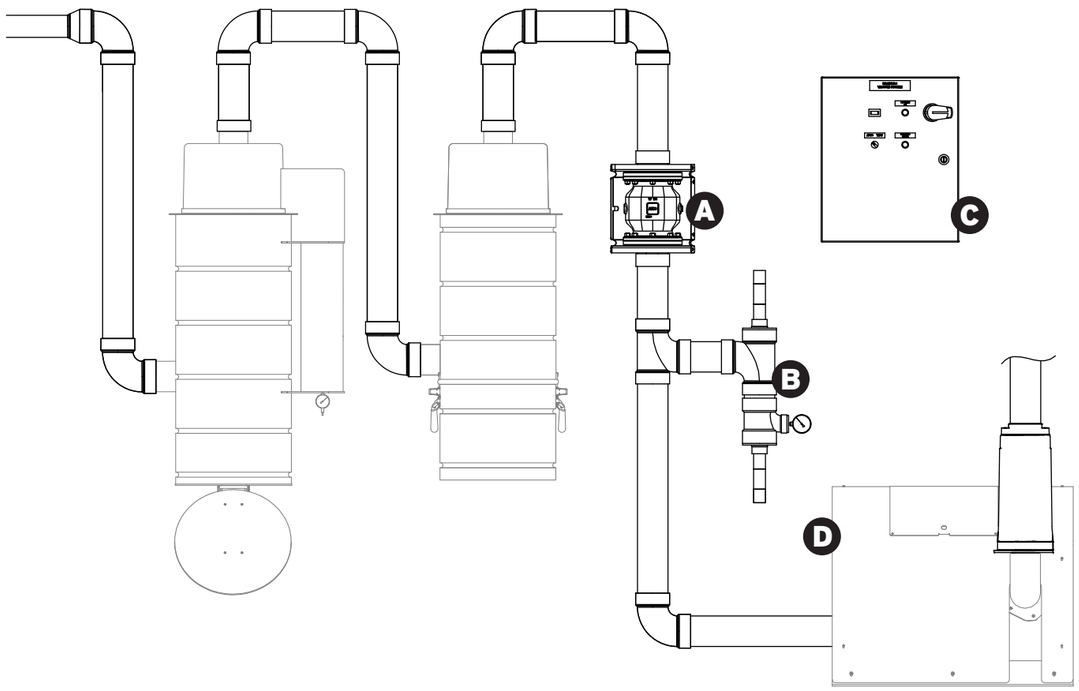

EXAMPLES OF PROPER AND IMPROPER INSTALLATIONS

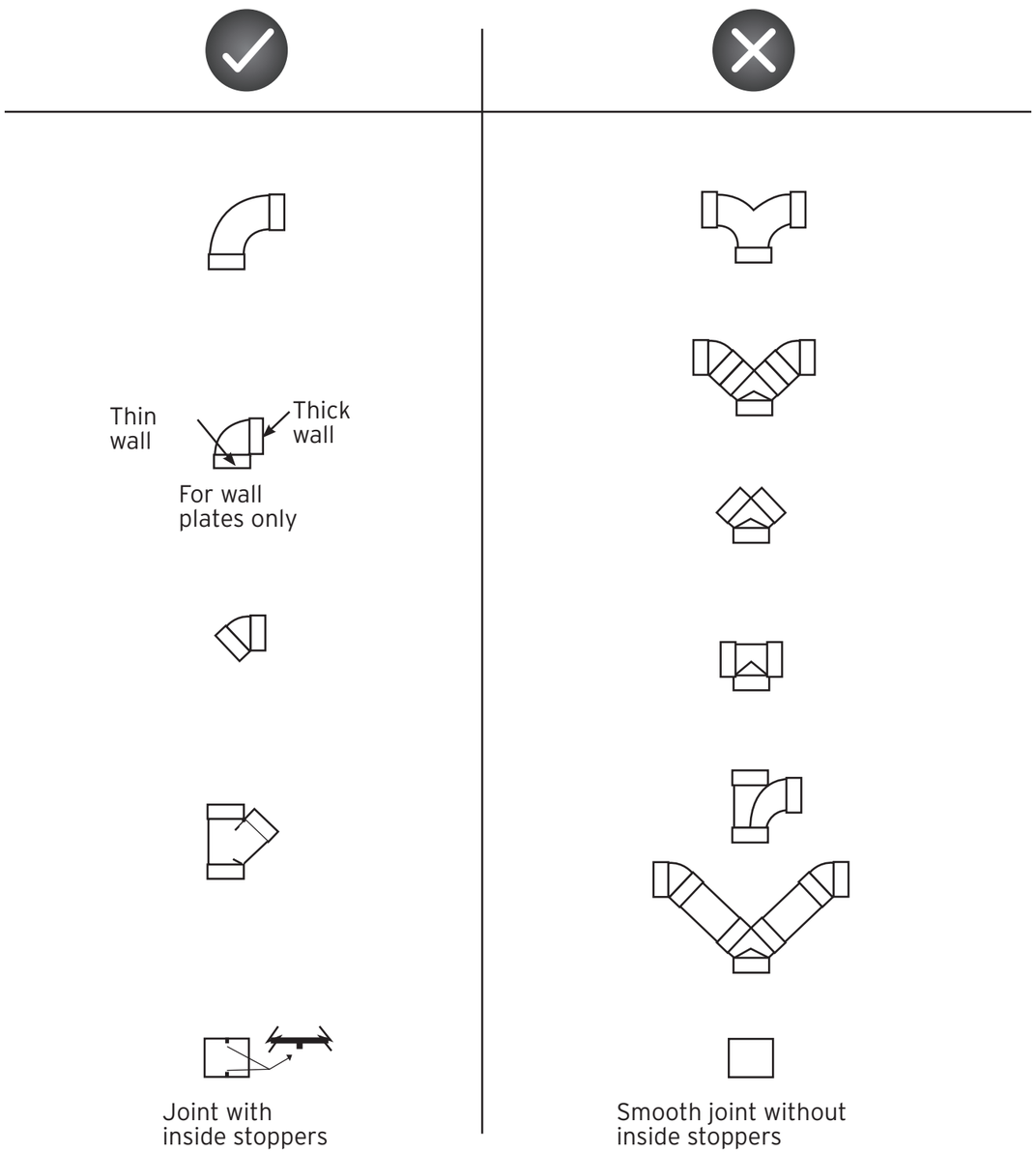

PIPING INSTALLATION

EXAMPLES OF PROPER AND IMPROPER INSTALLATIONS

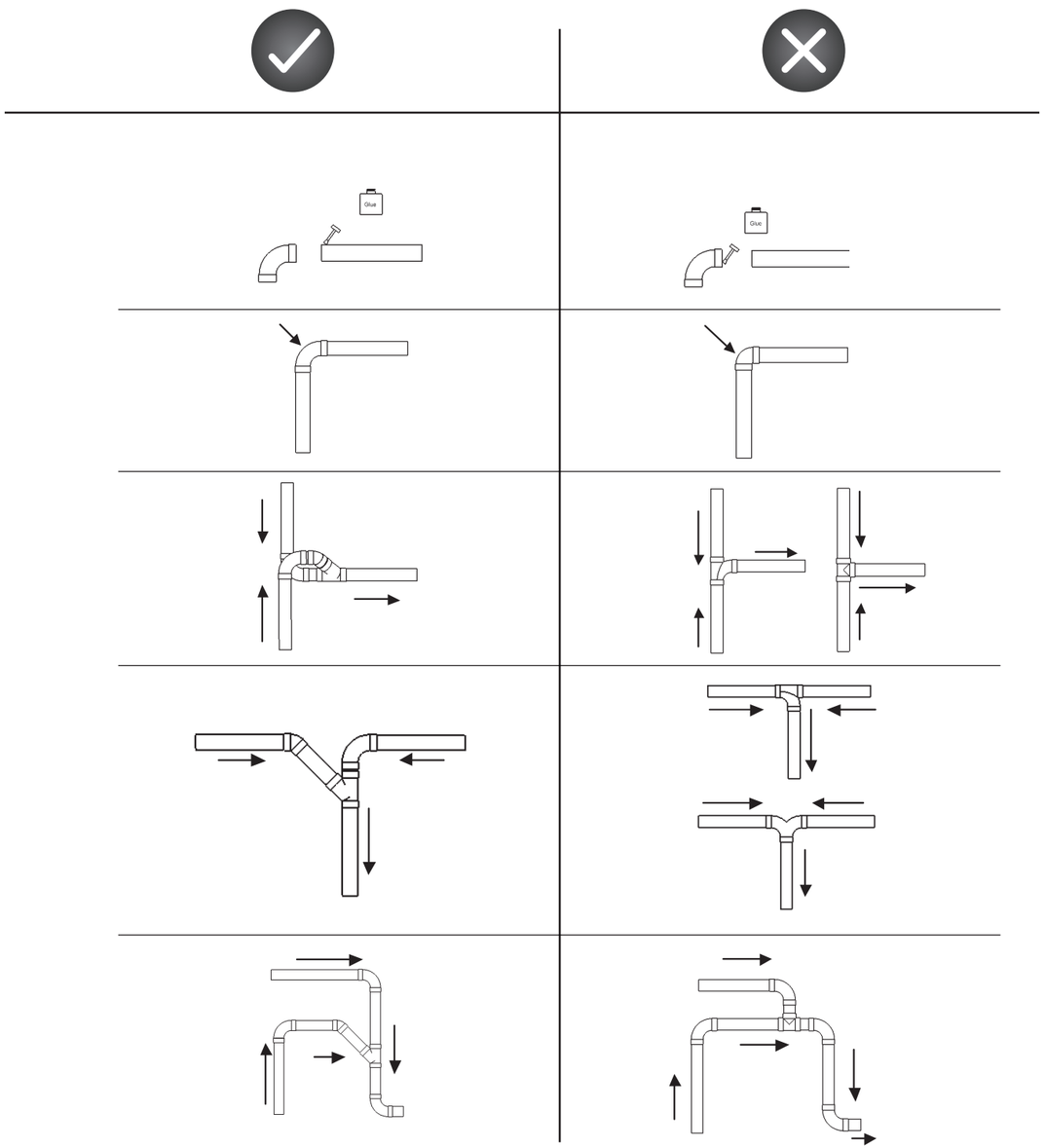

EXAMPLES OF PROPER AND IMPROPER INSTALLATIONS

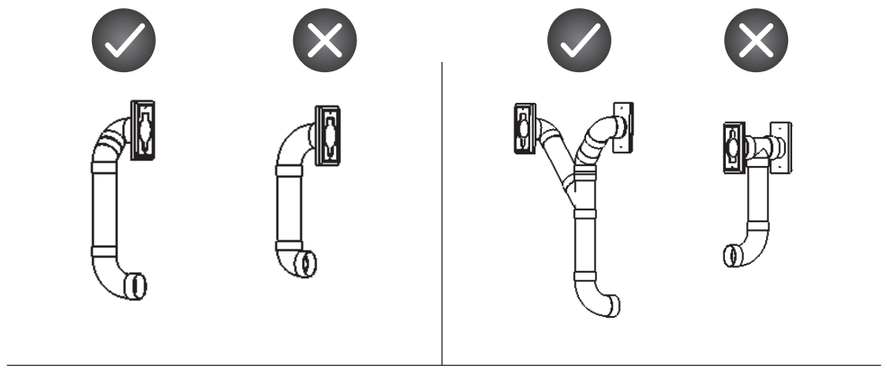

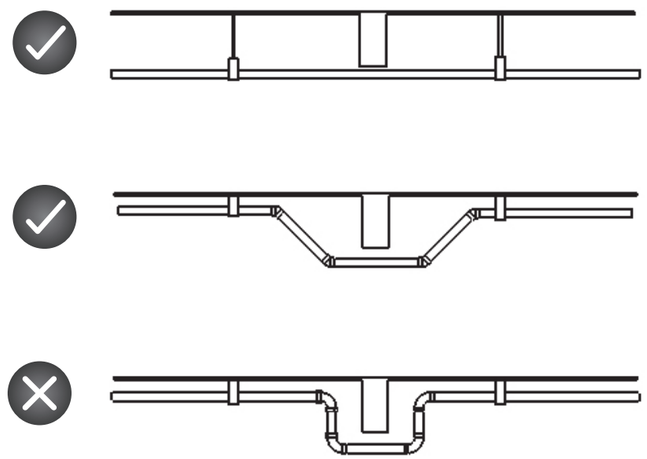

THE CENTRAL SYSTEM IS EQUIPPED WITH AN HOUR METER TO HELP YOU SET UP A MAINTENANCE PROGRAM IN ORDER TO AVOID MAJOR AND COSTLY REPAIRS AND MINIMIZE OPERATIONAL DISRUPTION.

CARTRIDGE FILTER

The main separator and safety separator work in tandem with a large cartridge filter, designed to maintain optimum suction power from your system while extending motor life. To ensure continuous, efficient performance, it is essential to clean this filter regularly. The frequency of cleaning depends on the type of material sucked in, as some substances can clog the filter more quickly than others.

We strongly recommend a second pair of filters for regular rotation. This will enable you to maintain uninterrupted operations, even during the cleaning process.

To clean the cartridge filter, start by blowing compressed air from the inside out to remove accumulated particles. Then rinse the filter with clean water. **CAUTION:** Be sure to let the filter dry completely before re-use.

EXTERNAL MOTOR

✓ WIRE MESH

The external motor screen must be kept clear at all times.

Inspect regularly and clean with compressed air if necessary.

✓ COOLING FAN

Every 1,000 hours of operation, clean the fan with compressed air.

✓ BALL BEARINGS

When the motor reaches 15,000 hours of operation, please contact your sales representative to change the 2 ball bearings.

✓ TURBINE

Every 5,000 hours of operation, disassemble the motor's air inlet and outlet for visual inspection. If dust is present, disassemble the motor to gain access to the impeller for cleaning.

DISASSEMBLE THE MOTOR AND ACCESS THE TURBINE

1. First make sure that the circuit breaker connected to the motor is switched off.
2. Unscrew the 10 Phillips screws (4 on each side, 2 on top).
3. Remove the 2 black panels. The front panel can be seated over the air inlet and outlet to avoid undoing the electrical wiring.
4. Unscrew the 6 screws (using a 5/32" Allen Key) holding the casing to the base.
5. Unscrew the lifting ring.
6. With the help of a colleague, lift and remove the box.
7. Using a Vise-Grip, unscrew the base of the lifting ring.
8. Now remove the cover panel by unscrewing the 5 bolts (19 mm / 3/4"); 3 on the cover and 2 on the base.
9. Next, unscrew the 7 screws (Allen Key 8mm) and the 4 Torx screws (T20) in the middle that hold the motor cover in place.
10. Carefully remove the cover using a flathead screwdriver. CAUTION: it is very important not to damage the edges, to maintain the motor's watertight integrity.

CLEANING THE TURBINE

Do not use water or other cleaning solutions.

Make sure each blade is free of debris and fine dust.

Take the opportunity to clean the entire motor and housing, inside and out.

Before reassembling, ensure that the edges of the cover and motor are completely free of fine dust.

This device complies with the Waste Electrical and Electronic Equipment (WEEE) Directive. This directive aims to promote the recycling of waste electrical and electronic equipment (WEEE), and to encourage the development of products suitable for more efficient end-of-life recovery.

Figure A

The WEEE Directive stipulates that the original supplier should take back the obsolete device free of charge to the consumer. Please inform the supplier of your wish to have the used device taken back when you order a new replacement device.

Do not dispose of the device with unsorted waste. The wheelie garbage can symbol on the device label (Figure A) indicates this requirement. You must ensure that the device is taken back, processed and recycled by an authorized company.

For further information, contact your municipal waste disposal service.

If you wish to speak with a service agent, please contact your dealer.

To find a retailer near you, visit our website:
https://www.drainvac.com/ca/en/retailers/find-a-retailer/

Drainvac International
150 rue Brunet, Mont-St-Hilaire, QC, Canada, J3H 0M6

DRAINVAC®