DRAINVAC®
Central Vacuums

OWNER'S MANUAL

ELEGANCE SERIES

05/2026

IMPORTANT SAFETY INSTRUCTIONS

When using an electronic appliance, basic safety precautions should always be followed. Read all guidelines before operating the unit.

To reduce risk of fire, electric discharges or injuries:

- Use this vacuum only for its intended use as described in this manual. (Use of attachments not recommended by the manufacturer may cause fire, electric shock, injury or damage to system components.)
- Do not allow vacuum to be used as a toy. Close supervision is necessary when this vacuum is used by or near children.
- Do not leave the unit running without any supervising. Disconnect the unit if it is not used and before maintenance.
- Do not pick up anything that is burning or smoking, such as cigarettes, matches, or hot ashes.
- This vacuum cleaner is intended for dry pick up only. Do not use on wet or humid surfaces, waste solvents (paint or other), explosive materials that would cause harm to the vacuum cleaner.
- Do not vacuum drywall dust or baking flour as it may cause damage to your vacuum.
- Avoid picking up hard or sharp objects to prevent damaging or block the hose and the plastic pipes.
- Do not put any object into openings. Do not use if an opening is blocked. Keep free of dust, lint, hair and anything that may reduce airflow/suction. Lack of air flow will cause the motor to overheat.
- This vacuum cleaner creates suction. Keep hair, face, fingers, all body parts and loose clothing away from any openings.
- Never operate without the filter in place.
- Never plug in a unit designed to operate with a current of 120V in a 220V-240V outlet and vice versa.
- If the power cord is damaged, it must be replaced by a special cord available from the authorized local dealer/distributor.
- Do not use extension cords or outlets with inadequate current carry capacity.
- Never operate this vacuum if it has a damaged cord or plug, if it is not working properly, or if it has been dropped or damaged. Return to authorized dealers/ distributor for repairs.
- Never handle plug, cord or power units with wet hands.

- Never disconnect plug by pulling cord. To disconnect from the outlet, grasp the plug, not the cord.
- Connect to a properly grounded outlet only. See grounding instructions.
- Keep cord away from heated surfaces.
- Turn off all controls before unplugging.
- Hoses with electrical connections must not be used if damaged.

By overlooking safety rules, you might risk putting your health in danger and to those who surround you!

Drainvac disclaims any responsibility should you infringe upon these guidelines.

SAVE THESE INSTRUCTIONS

TABLE OF CONTENTS

TECHNICAL SPECIFICATIONS

TYPES OF UNITS 6
UNIT DESCRIPTION 7-8
DUST BAGS AND FILTERS 9

UNIT INSTALLATION

FIRST THINGS FIRST 10-11
MOUNTING THE UNIT ON THE WALL 12-13
CONNECTING THE AIR INLET 13
DUST BAG / FILTER 14
AUDIOPROTEK MUFFLER 15
EXHAUST MUFFLER 15

PIPING INSTALLATION

GENERAL NOTICE 16
DIAGRAM OF AN INSTALLATION 17
DIFFERENT INSTALLATION POSSIBILITIES 18
EXAMPLES OF PROPER AND IMPROPER INSTALLATIONS 19-21

ELECTRICAL POWER SUPPLY

CONNECTION PROCEDURES 22
DIAGRAM OF AN APPROPRIATE CONNECTION 23
GROUNDING INSTRUCTIONS 24

MAINTENANCE PROCEDURES 25

WEEE GUIDELINES / ROHS / SUPPORT 26

TECHNICAL PROBLEMS 27

ANNEX

ANNEX I (CIRC02)
ANNEX II (CIRC18)

DRAINVAC
Central Vacuums

INTRODUCTION

Thank you for choosing a Drainvac product.

Please read carefully the following instructions.

The installation and operation procedures must be followed to obtain maximum performance and avoid unnecessary service calls.

REGISTRATION

To fill in the Drainvac product registration form, go to
www.drainvac.com/client-support/register-your-drainvac

First off, we recommend you to fill out this form before you start the installation process. If you have any concerns or problems you may encounter, please contact the nearest retailer. The unit's profile will be required.

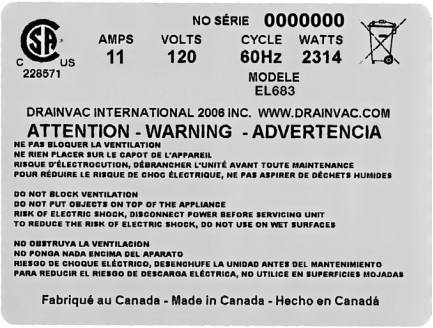

Metal tag

Model*: _____

Serial number*: _____

Retailer name: _____

Date of purchase: _____

Date of the last maintenance: _____

*This information is found on a metal tag located on the left side of the unit.

TECHNICAL SPECIFICATIONS

You have purchased one of the following models. Identify the one to related to it.
The model number appears on the technical label stuck on the left side of the unit.

NORTH AMERICA (108V - 120V)

MODELS	AIR WATTS	H_2O	CFM	DECIBELS	AMPS	GAL./L	SIZE in/cm
DV.AIR700	800	138	138	60	14	Up to 3.75 / 17	12 dia. x 23 / 30 dia. x 58
DV.AIR683	683	113	141	69	15		12 dia. x 28.5 / 30 dia. x 72.4
DV.AIR2X5	2 x 520	170	135	69	13.5 (208V - 240V)	Up to 9 / 41	15 dia. x 30.7 / 38 dia. x 78

INTERNATIONAL (220V - 240V)

MODELS	AIR WATTS	mmH_2O	m^3/h	DECIBELS	AMPS	GAL./L	SIZE in/cm
DVE.AIR700	700	3880	315	60	7	Up to 3.75 / 17	12 dia. x 23 / 30 dia. x 58
DVE.AIR683	683	3977	213	69	8.4		12 dia. x 28.9 / 30 dia. x 73.6
DVE.AIR2X5	2 x 520	4318	271	69	13.5	Up to 9 / 41	15 dia. x 30.7 / 38 dia. x 78

UNIT DESCRIPTION

ILLUSTRATED CONFIGURATION OF A SINGLE-MOTOR UNIT

EL700, EL683, ELE700, ELE683

*Your model may vary from the illustrated figure.

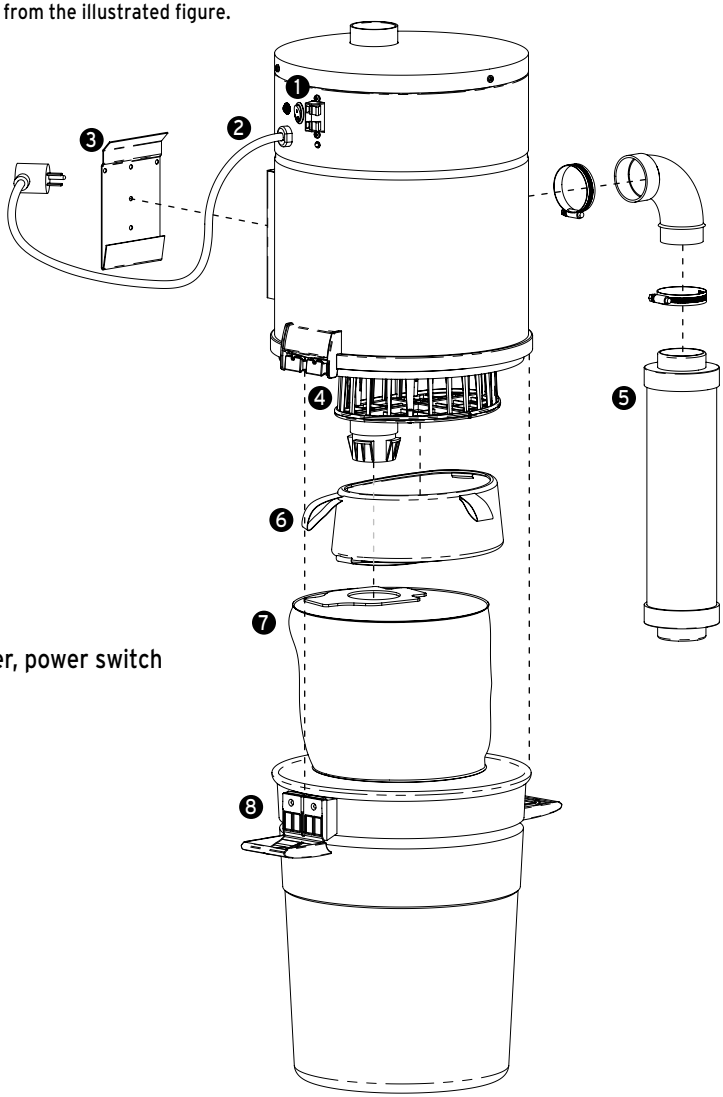

1. Circuit breaker, power switch and 24V plug
2. Power cord
3. Wall support
4. Metal cage
5. Muffler
6. Cage filter
7. Dust bag
8. Canister

UNIT DESCRIPTION

ILLUSTRATED CONFIGURATION OF A DUAL-MOTOR UNIT

EL2X5, ELE2X5

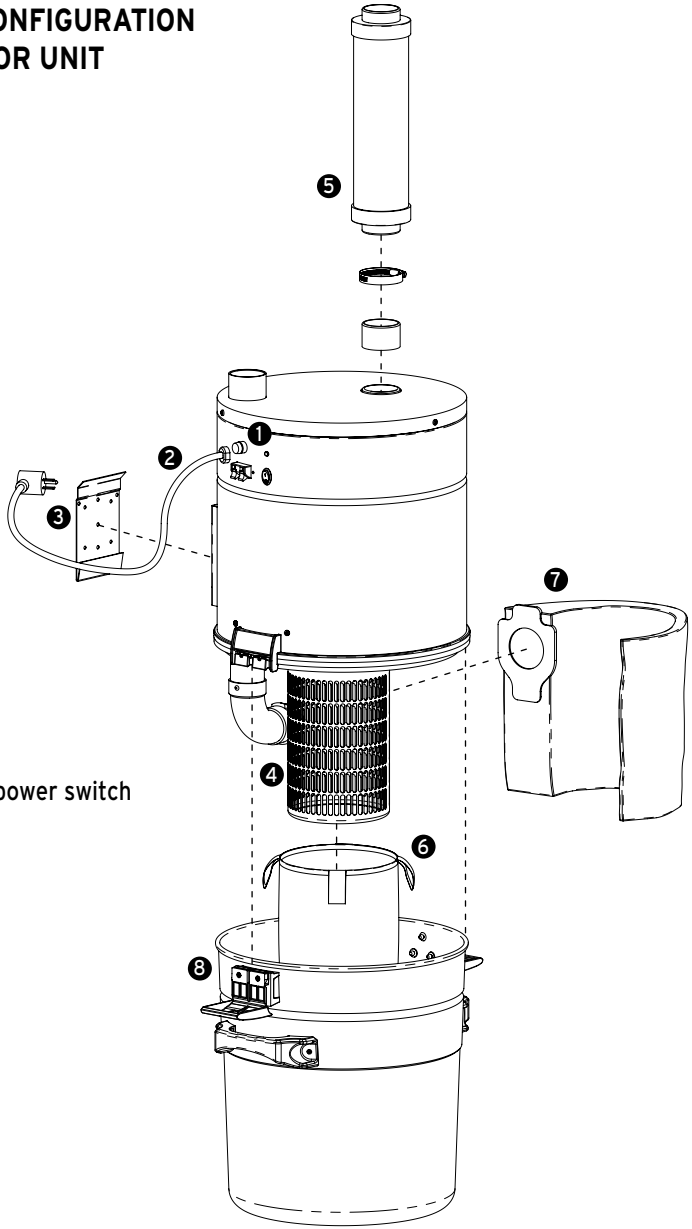

1. Circuit breaker, power switch and 24V plug
2. Power cord
3. Wall support
4. Plastic cage
5. Muffler
6. Cage filter
7. Dust bag
8. Canister

DUST BAGS AND FILTERS

Please mark the dust bag and the filter which corresponds to your vacuum in order to refer yourself when the time will come to change it. All models of the Elegance series uses a cage filter and models EL700 and ELE700 must use a dust bag. **Improper use will void the warranty.**

○

SAC20

Disposable 3-ply cloth dust bags, 9 gal. (41L)

EL2X5, ELE2X5

○

SAC31

Disposable 3-ply cloth dust bags, 3,75 gal. (17L)

EL700, EL683, ELE700, ELE683

○

FILT07DVI

Metal cage filter with a capacity of 9 gal. (41 L)

EL2X5, ELE2X5

○

FILT30DVI

Plastic cage filter with a capacity of 3,75 gal. (17 L)

EL700, EL683, ELE700, ELE683

REQUIRED TOOLS FOR A REPLACEMENT

Screwdriver

5/16" (8 mm) socket head screwdriver

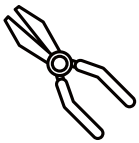

Cutting pliers

Measuring tape

REQUIRED TOOLS FOR A NEW INSTALLATION

Screwdriver

5/16" (8 mm) socket head screwdriver

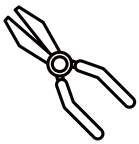

Cutting pliers

Measuring tape

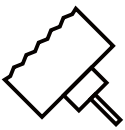

2,25" (57 mm) hole saw

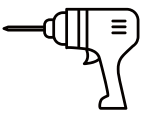

Drill with 0.5" (12.5 mm) bit

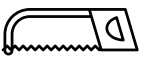

Saw

WHERE TO INSTALL THE UNIT

In a multi-story building, we recommend installing the system on the **lowest level** to avoid having to work against gravity. A garage or storage room is equally suitable. If installation in a secluded location is not possible, the Elegance series is designed to blend harmoniously with your decor.

Warning: If you plan to exhaust the air outdoors, the length of the exhaust line must not exceed 20 feet.

MINIMUM DIMENSIONS AND SPACING

It is important to install the unit in a location where it will be easily accessible for maintenance and to effectively evacuate dust. The minimum spacing required is the following:

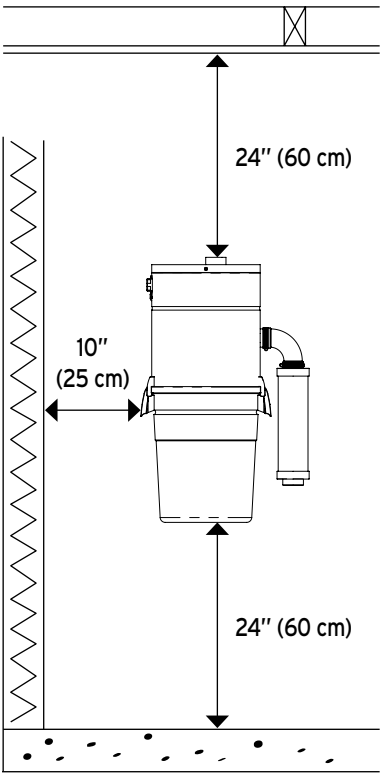

1) MOUNTING THE UNIT ON THE WALL

- Undo the fastener securing the wall bracket and base at the back of the unit with cutting pliers.

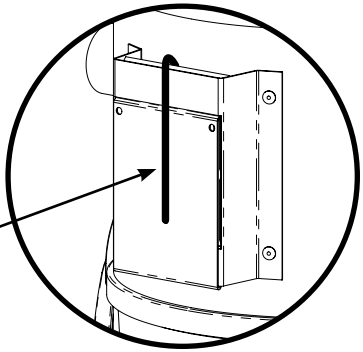

- If the wall is covered with gypsum board, we recommend installing a wooden panel screwed to the wall studs beforehand for more stability. Then, screw the bracket to the wall with the five (5) screws supplied with the unit.

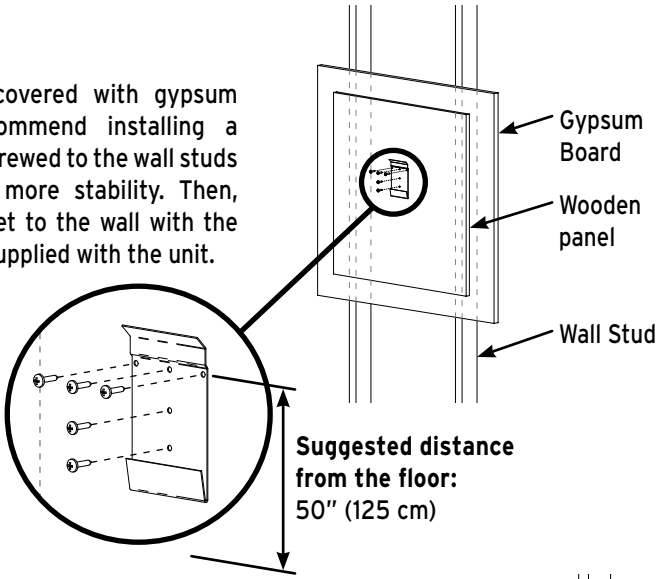

- For a installation directly on a wall stud, screw three (3) screws in the middle area only.

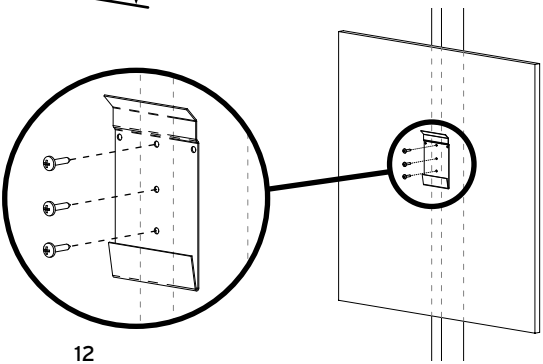

- Lift the head to slide its support onto the wall bracket.

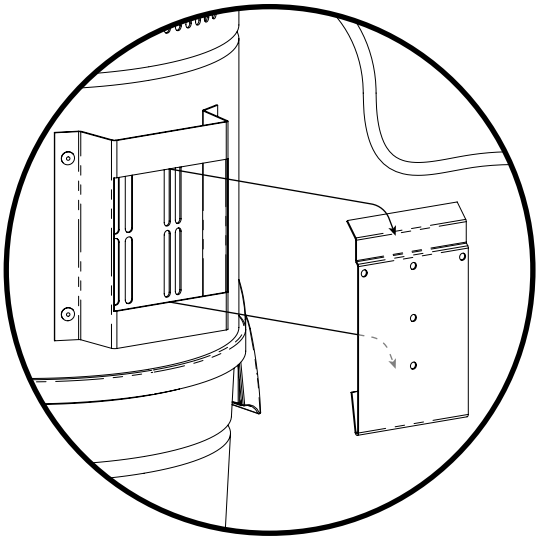

2) CONNECTING THE DUST INLET

Connect the dust inlet onto the unit securing it with a collar (do not glue).

Your model may differ from the illustration.

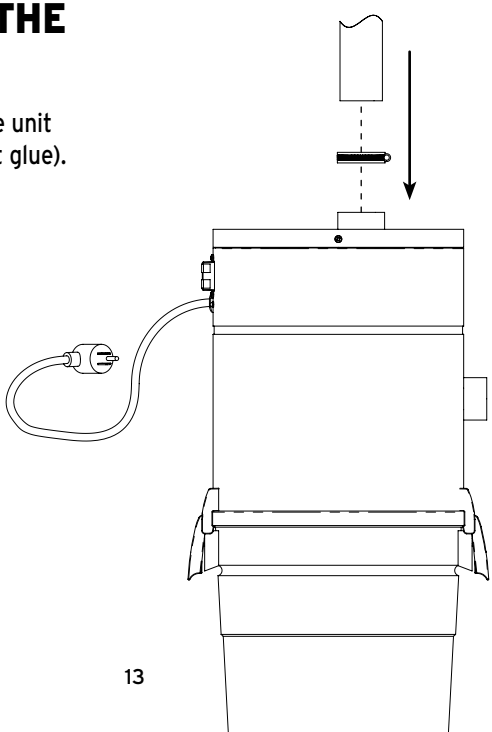

All units are supplied with an SMS filter and a dust bag (the filter is already preinstalled to the unit).

3) FILTER

Using the clamps, disconnect the tank from the main unit. You should see the filter preinstalled. Ensure that the cloth filter is properly set up completely to the top of the plate.

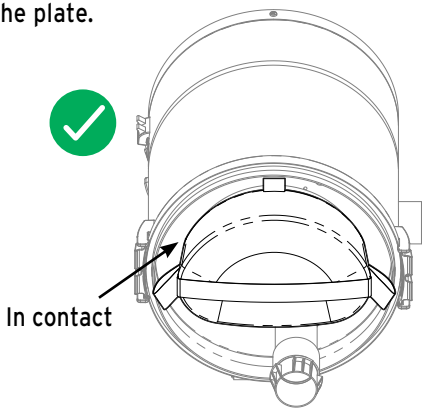

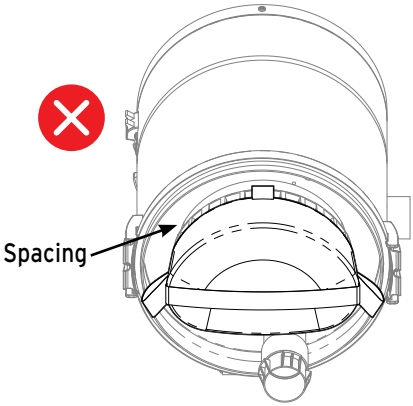

4) DUST BAG

Install the appropriate dust bag for your model and follow the instructions printed on the back of the packaging.

SAC31

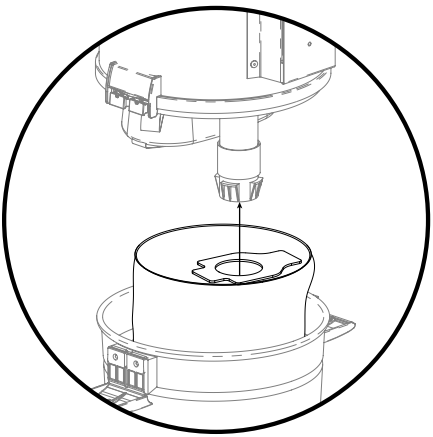

SAC14, SAC20

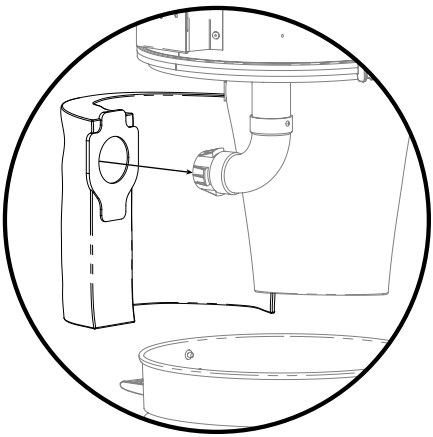

5) AUDIOPROTEK MUFFLER

Models EL2X5 and ELE2X5 are supplied with a curved audioprotek muffler. Peel the strip from the foam and stick the muffler onto the unit's head. Use the two supplied screws to secure it into place.

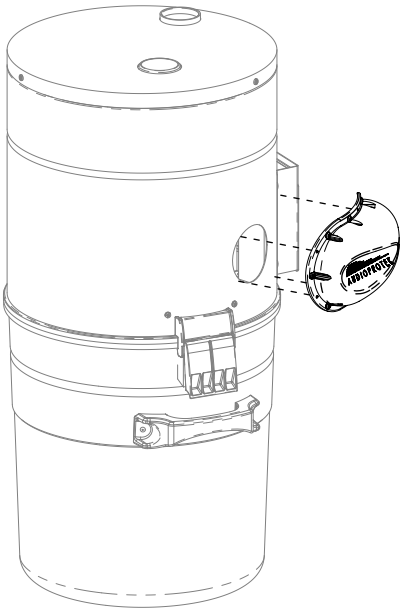

6) EXHAUST MUFFLER

Connect the muffler to the unit using the supplied clamps. **Do not glue.** The 90° elbow may be replaced with a straight pipe; however, **the total length of the exhaust line should not exceed 20 feet.**

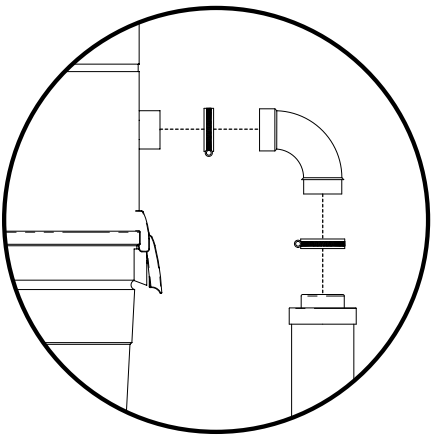

Simple motor

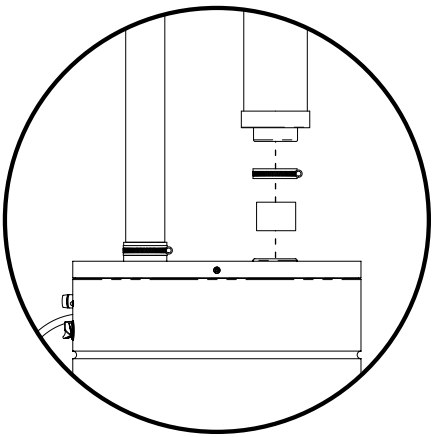

Double motor

PIPING INSTALLATION

The following pages illustrate piping diagrams, typical installations and the parts that we recommend for an optimum performance of your central vacuum system.

GENERAL INFORMATION

- If your unit includes two motors, it is important to use metal piping and couplings for the air outlet.
- To determine where to locate the wall inlets, use the length of the vacuum hose as a basis, measuring the furthest point from the wall where the wall inlets are to be installed. Do the same for all the wall inlets until all areas of the house or building can be reached with the vacuum hose, by moving it from one wall inlet to another; **don't forget to install one in the garage or outside to vacuum your car.**
- If your walls are made of gypsum board, **never install a wall inlet in the centre of the wall.** Drill the holes for the wall inlets close to a wall stud or a door frame.
- Any screw length can be used if you install the piping as illustrated in **Figure A.**
- If you install the piping as illustrated in **Figure B**, make sure to position the small screw in the right place to avoid piercing a hole through the pipe.
- Always use a short elbow when connecting the wall inlets **(Figures A and B)** to prevent long objects (for example, a pencil) that may have been vacuumed by mistake from blocking the piping further on.

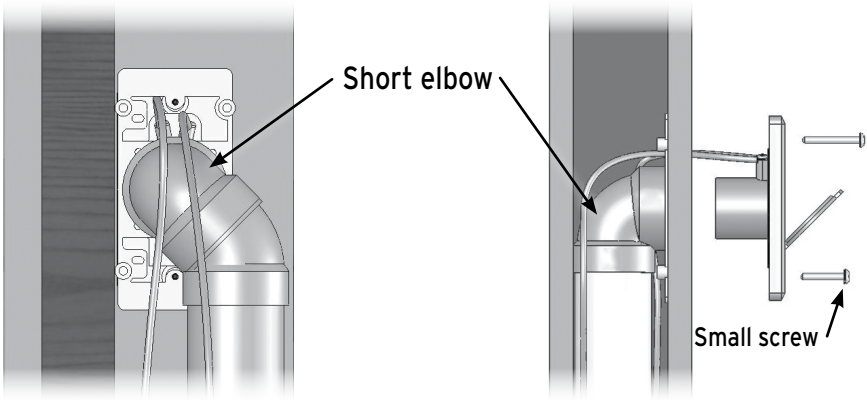

Figure A **Figure B**

DIAGRAM OF A RESIDENTIAL INSTALLATION

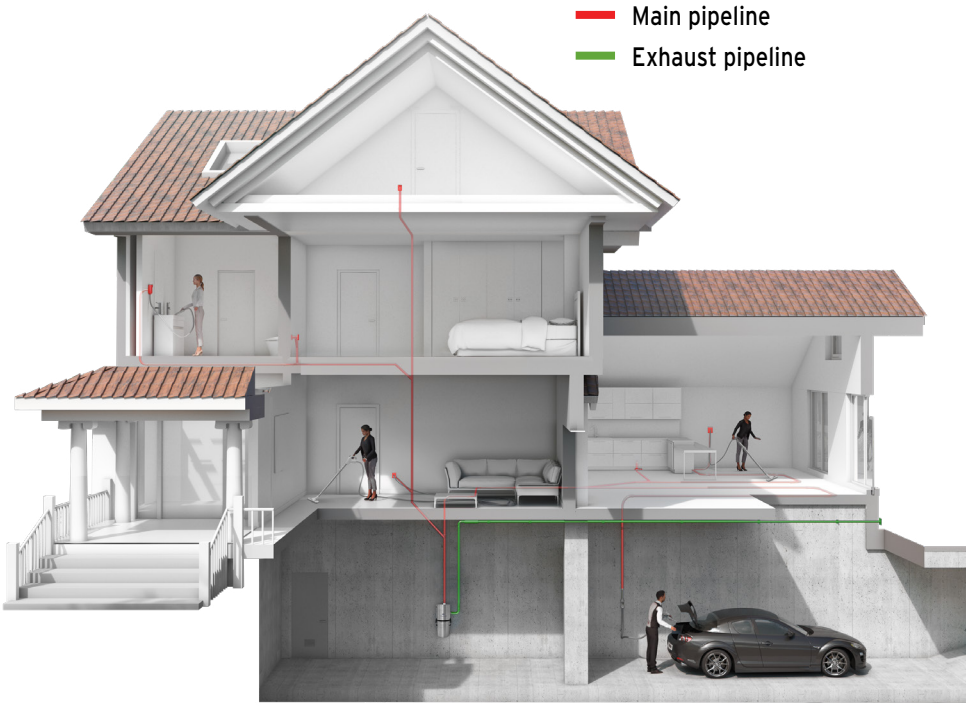

Wallyflex
Installation

Retraflex
Installation

Vroom Retract Vac
Installation

DIFFERENT INSTALLATION POSSIBILITIES

On the top floor
(at the end of a pipeline)

On an intermediary floor

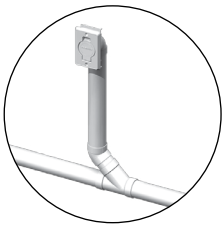

On the first floor
(connected above a pipeline under the floor)

In the basement
(connected under a pipeline under the floor)

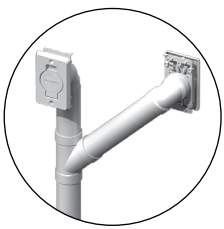

Back-to-back

EXAMPLES OF PROPER AND IMPROPER INSTALLATIONS

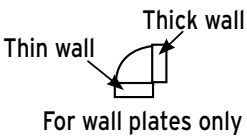

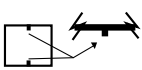

Joint with inside stoppers

Smooth joint without inside stoppers

EXAMPLES OF PROPER AND IMPROPER INSTALLATIONS

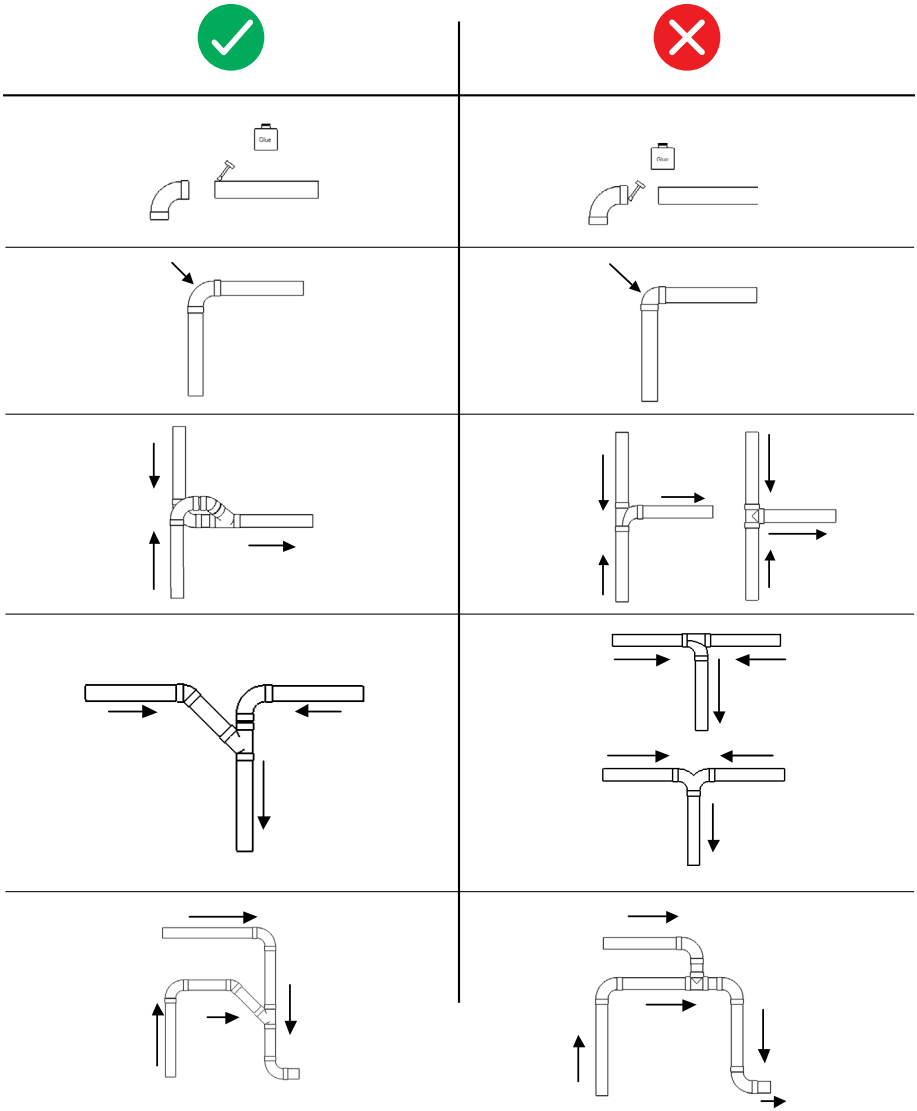

EXAMPLES OF PROPER AND IMPROPER INSTALLATIONS

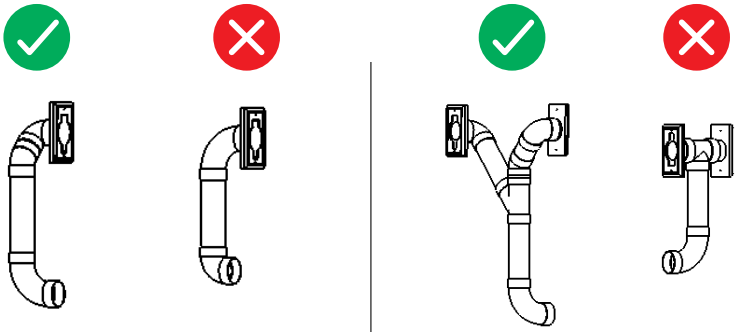

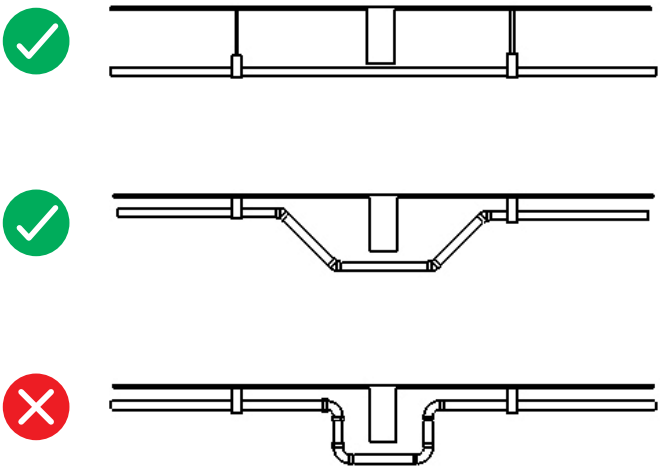

ELECTRICAL POWER SUPPLY

An electrical cord is equipped to all central vacuum systems. An adequate electrical power outlet must be installed near the unit. **We strongly recommend installing an electrical circuit which will be used only for the unit.**

CONNECTION PROCEDURE

- Install the 24-volt wires from the network (each wall inlet) to the unit.*
- Connect the unit to the electrical outlet with the power-supply cord.
- The unit is now ready to be used.

* The 24V wire connection may differ depending on your model.

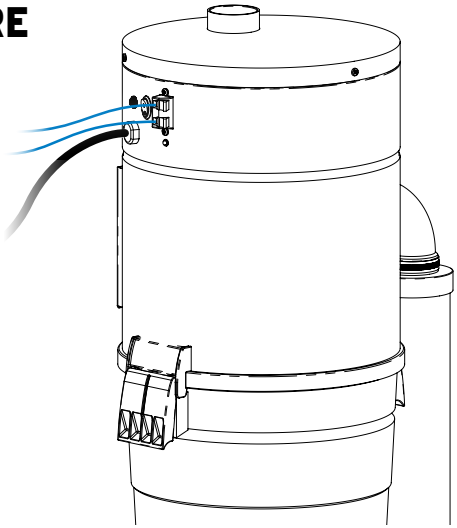

EXAMPLES OF PROPER AND IMPROPER INSTALLATIONS

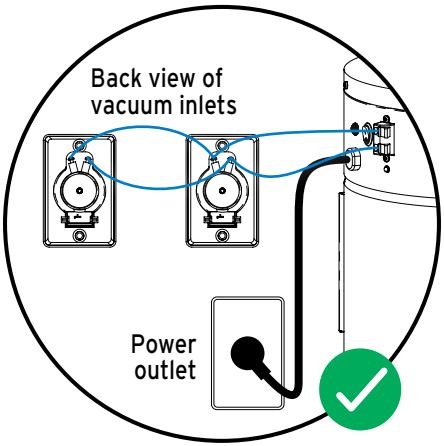

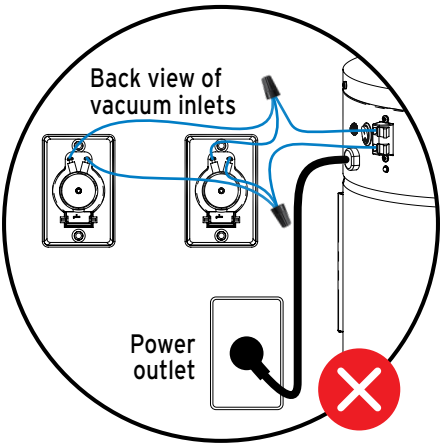

DIAGRAM OF AN APPROPRIATE CONNECTION

All units used in North America has a **circuit of 15 amp./120V,** whereas the International has a **circuit of 10 amp./220V-240V** except for some exceptions:

- EL2X5: 15 amp./208V - 240V
- ELE2X5: 20 amp./220V - 240V

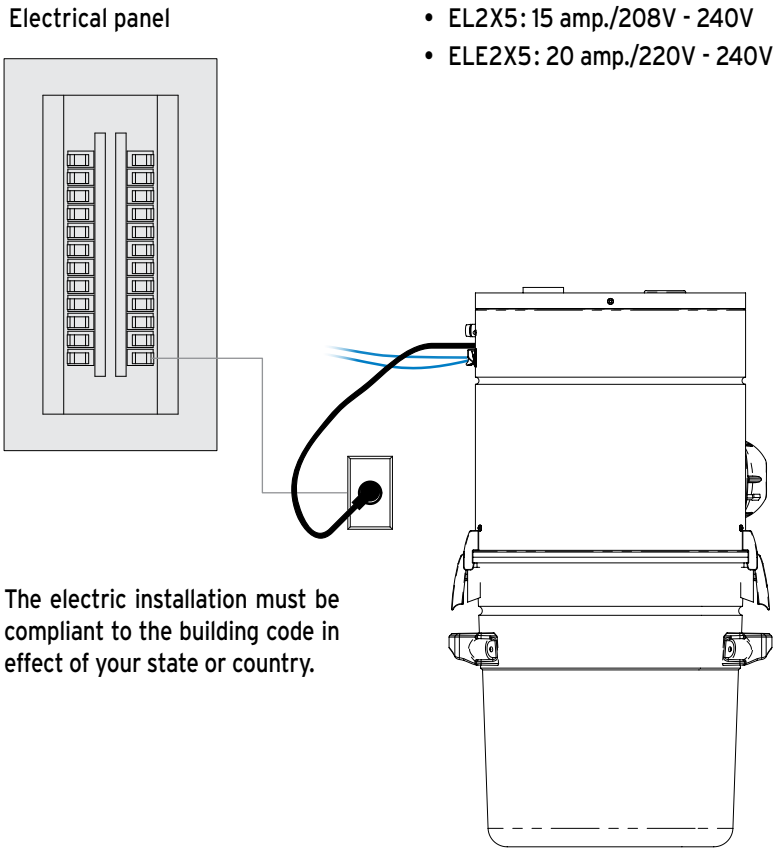

The electric installation must be compliant to the building code in effect of your state or country.

If you experience voltage surge problems on your electrical circuit in spite of adequate connections, a high magnetic circuit breaker can be installed on your electrical panel. Contact an electrician for more information.

GROUNDING INSTRUCTIONS

These units must be grounded. If it should malfunction or breakdown, grounding provides a path of least resistance for electric current to reduce the risk of electric shock. This appliance is equipped with a cord having an equipment-grounding conductor and grounding plug. The plug must be inserted into an appropriate outlet that is properly installed and grounded in accordance with all local codes and ordinances.

WARNING - Improper connection of the equipment-grounding conductor can result in a risk of electric shock. Check with a qualified electrician or service person if you are in doubt as to whether the outlet is properly grounded.

DO NOT MODIFY THE PLUG PROVIDED WITH THE UNITS -
IF IT DOES NOT FIT THE OUTLET, HAVE A PROPER OUTLET INSTALLED BY A QUALIFIED ELECTRICIAN.

These units are for use on a nominal 120V or a 220V-240V circuit and have a grounding attachment plug that looks like the one illustrated below. Make sure that the electrical cord is connected to an outlet having the same configuration as the plug.

NO ADAPTOR SHOULD BE USED WITH THIS APPLIANCE.

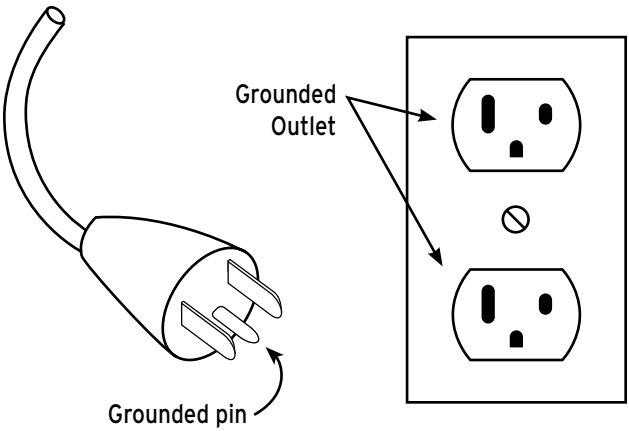

*Illustration of a north-americain electrical outlet

MAINTENANCE PROCEDURES

Each system requires a minimum maintenance, without any exception.

MOTOR BRUSHES

Beyond the occasional external cleaning, we recommend that you **inspect your motor brushes after 500 hours of use** to check how worn they are and have them replaced if necessary. On average, this inspection should occur once every 5 to 7 years. When the time comes, contact your retailer or distributor for this maintenance procedure. Take note that the motor brushes are not included in the warranty.

FILTER AND DUST BAG

You must clean the filter and replace the dust bag periodically. This will prevent your vacuum from losing any power and will extend its lifespan.

- The dust bag **CANNOT** be washed or emptied. It must be replaced by a new one. If you notice a flagrant decline of power, it may be a sign of a full dust bag and must be changed. For a reference purpose, a regular usage with a 3,75 gal (17L) unit, the bag usual gets replaced after 6 to 12 months. For a 9 gal (41L) unit, it is around 12 to 18 months. **DO NOT CHANGE THE DUST BAG WHILE THE UNIT IS RUNNING.**
- The filter can be easily cleaned in the washing machine but it is not recommended to put it in the dryer. It must be **COMPLETLY DRY** before reusing. Regarding the cleaning frequency of the cage filter, we recommend cleaning whenever the dust bag is changed.

To change them, release the clamps from the tank.

1. Remove the bag and discard it.
2. Clean or wash the filter and let it dry.
3. Place the filter.
4. Place the new dust bag.
5. Reattach the tank to the main unit.

Every model of the Elegance series is designed to operate with a cage filter and models EL700 and ELE700 operates with a dust bag.
Improper use will void the warranty.

WEEE GUIDELINES

This unit complies with the **WEEE (Waste Electrical and Electronic Equipment) Guidelines**, which promote the recycling of this type of waste equipment and encourage the development of products that are adapted to efficient waste reclamation at the end of their life cycle.

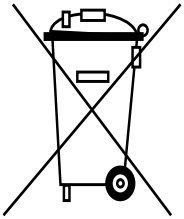

Figure C

The WEEE Guidelines stipulate that the original supplier should agree to reclaim any obsolete equipment free of charge. We recommend that you advise your supplier that you would like him to reclaim your unit when you order and replace it with a new one.

Do not discard the unit with your regular garbage. The symbol representing a garbage bin on wheels on the unit's label **(Figure C)** attests to this requirement. You must ensure that, at the end of its life cycle, your unit is reclaimed, treated and recycled by an authorized retailer or firm.

For more information, contact your municipal waste management department.

RoHS

All presented units respect the European directive RoHS which limits the usage of six dangerous substances.

SUPPORT

If you wish to speak with a customer service representative, please contact your supplier/dealer.

To find a retailer near you, please visit our website.

THE UNIT WON'T START UP...

SOLUTION:

1) Check if the LED is lit.

2) Check the circuit breaker in your electrical panel.

3) Check the unit's circuit fuse/breaker.

4) Check the 24-volt circuit, as follows:

Establish an electrical contact between the two 24V circuit terminals of the unit with a metal object such as a screwdriver or a coin.

- If the unit starts up, either the 24V wire is cut or disconnected from one of the wall inlets, or the hose is defective.
- If the unit does not start up after all theses steps, the printed circuit is defective.

THE UNIT WON'T SHUT DOWN...

SOLUTION:

Check the 24-volt circuit as follows:
Disconnect one of the two wires on the unit's 24-volt circuit.

- If the unit shuts down, the problem could be that two 24-volt wires are touching themselves somewhere or that the wall inlet is defective.
- If the unit doesn't shut down, the printed circuit is defective.
  Unplug the power cord.

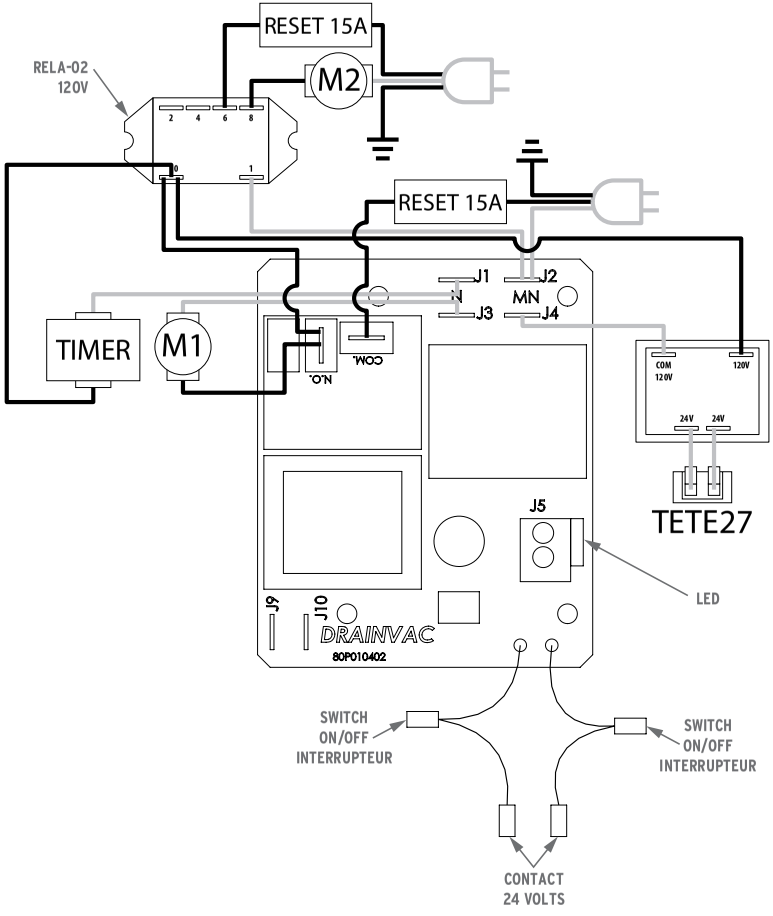

ANNEXE I
CIRC02
DIAGRAMME DE CONNEXIONS
1 MOTEUR
110-120 VOLTS
EL700, EL683

ANNEX I
CIRC02
CONNECTION DIAGRAM
1 MOTOR
110-120 VOLTS
EL700, EL683

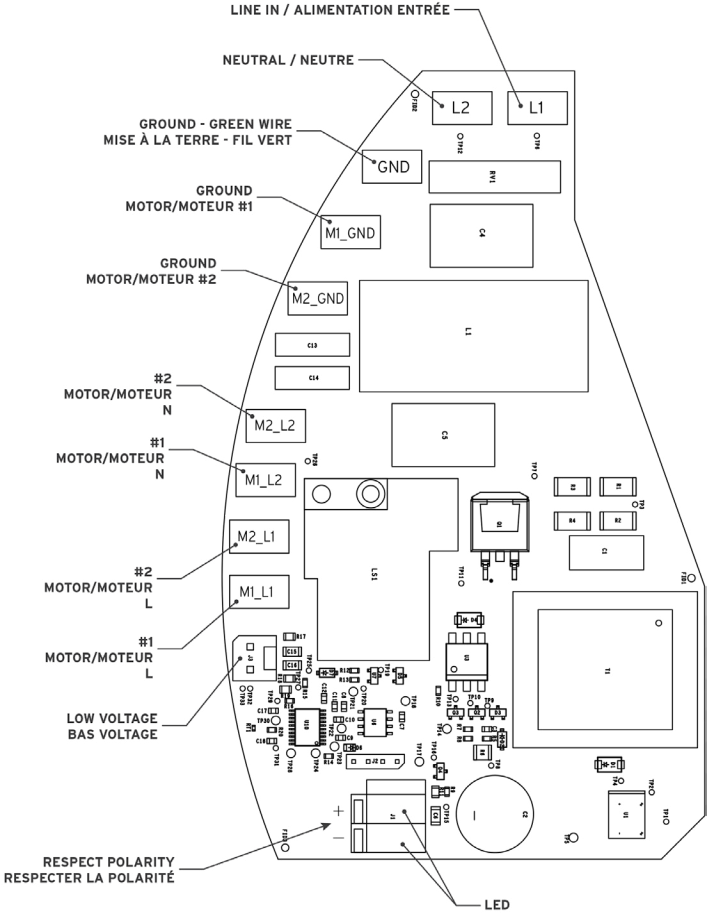

ANNEXE II
CIRC18
DIAGRAMME DE CONNEXIONS
1 ET 2 MOTEURS
220-240 VOLTS

EL2X5, ELE700, ELE683, ELE2X5

ANNEX II
CIRC18
CONNECTION DIAGRAM
1 AND 2 MOTORS
220-240 VOLTS

EL2X5, ELE700, ELE683, ELE2X5