DRAINVAC®
Cleaning Systems

OWNER'S MANUAL

PROXTRAK SERIES

MAN.LAV.BI
PRINTED IN CANADA (06-24)

IMPORTANT SAFETY INSTRUCTIONS

When using an electronic appliance, basic safety precautions should always be followed. Read all guidelines before operating the unit.

To reduce risk of fire, electric discharges or injuries:

- Use this vacuum only for its intended use as described in this manual. (Use of attachments not recommended by the manufacturer may cause fire, electric shock, injury or damage to system components.)
- Do not allow vacuum to be used as a toy. Close supervision is necessary when this vacuum is used near children.
- Do not leave the unit running without any supervising. Disconnect the unit if it is not used and before maintenance.
- Do not pick up anything that is burning or smoking, such as cigarettes, matches, or hot ashes.
- Do not pick up any flammable liquids or combustible materials (gasoline, fuel, diesel) hot debris, waste solvents (paint or other), explosive materials that would cause harm to the vacuum cleaner.
- Do not vacuum drywall dust or baking flour as it may cause damage to your vacuum.
- Avoid picking up hard or sharp objects to prevent damaging or block the hose.
- This vacuum cleaner creates suction. Keep hair, face, fingers, all body parts and loose clothing away from any openings.
- Never plug in a unit designed to operate with a current of 120V in a 230V outlet and vice versa.
- If the power cord is damaged, it must be replaced by a special cord available from the authorized local dealer/distributor.
- Do not use extension cords or outlets with inadequate current carry capacity.
- Never operate this vacuum if it has a damaged cord or plug, if it is not working properly, or if it has been dropped or damaged. Return to authorized dealers/ distributor for repairs.
- Never handle plug, cord or power units with wet hands.
- Never disconnect plug by pulling cord. To disconnect from the outlet, grasp the plug, not the cord.
- Connect to a properly grounded outlet only. See grounding instructions.

DRAINVAC Cleaning Systems

- Keep cord away from heated surfaces.
- Turn off all controls before unplugging.
- When transporting the unit in a vehicle, always tie it up in an upright position to prevent ***damages not covered by the warranty.***
- Hoses with electrical connections must not be used if damaged.

By overlooking safety rules, you might risk putting your health in danger and to those who surround you!

Drainvac disclaims any responsibility should you infringe upon these guidelines.

SAVE THESE INSTRUCTIONS

INTRODUCTION

We wish to thank you for your trust and congratulate you for having chosen a Drainvac product. It is a sound investment that will satisfy your vacuuming needs for years to come. Drainvac's cleaning systems are manufactured and checked at our factory by our qualified staff who have been specifically trained to this end. A number of installations and operating methods must be followed to ensure your system's maximum performance and to avoid unnecessary service calls. Please read this manual carefully.

REGISTRATION

To fill in the Drainvac product registration form, go to
www.drainvac.com/client-support/register-your-drainvac

First off, we recommend you to fill out this form before you start the installation process. If you have any concerns or problems you may encounter, please contact the nearest retailer. The unit's profile will be required.

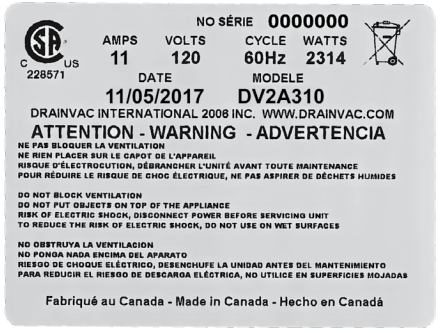

Metal tag

Model*: _____

Serial number*: _____

Retailer name: _____

Date of purchase: _____

Date of the last maintenance: _____

*This information is found on a metal tag located on the left side of the unit.

TABLE OF CONTENTS

TECHNICAL SPECIFICATIONS

HOW THE SYSTEM WORKS 6-7
TECHNICAL SPECIFICATIONS 8
UNIT DESCRIPTION 9
OPERATING THE MEMBRANE / HOUR METER 10

UNIT INSTALLATION 11

APPLICATION 12

ELECTRICAL POWER SUPPLY 13

GROUNDING INSTRUCTIONS 14

MAINTENANCE PROCEDURES 15

WEEE GUIDELINES / ROHS / SUPPORT 16

TECHNICAL PROBLEMS 17

ANNEX

ANNEX I
ANNEX II
ANNEX III

The ProXtrak was designed with a purposely moulded bottom for it to sit on the toilet* and to vacuum **liquids.** The tank never has to be emptied manually because it evacuates the wastewater automatically.

OPERATION SEQUENCE

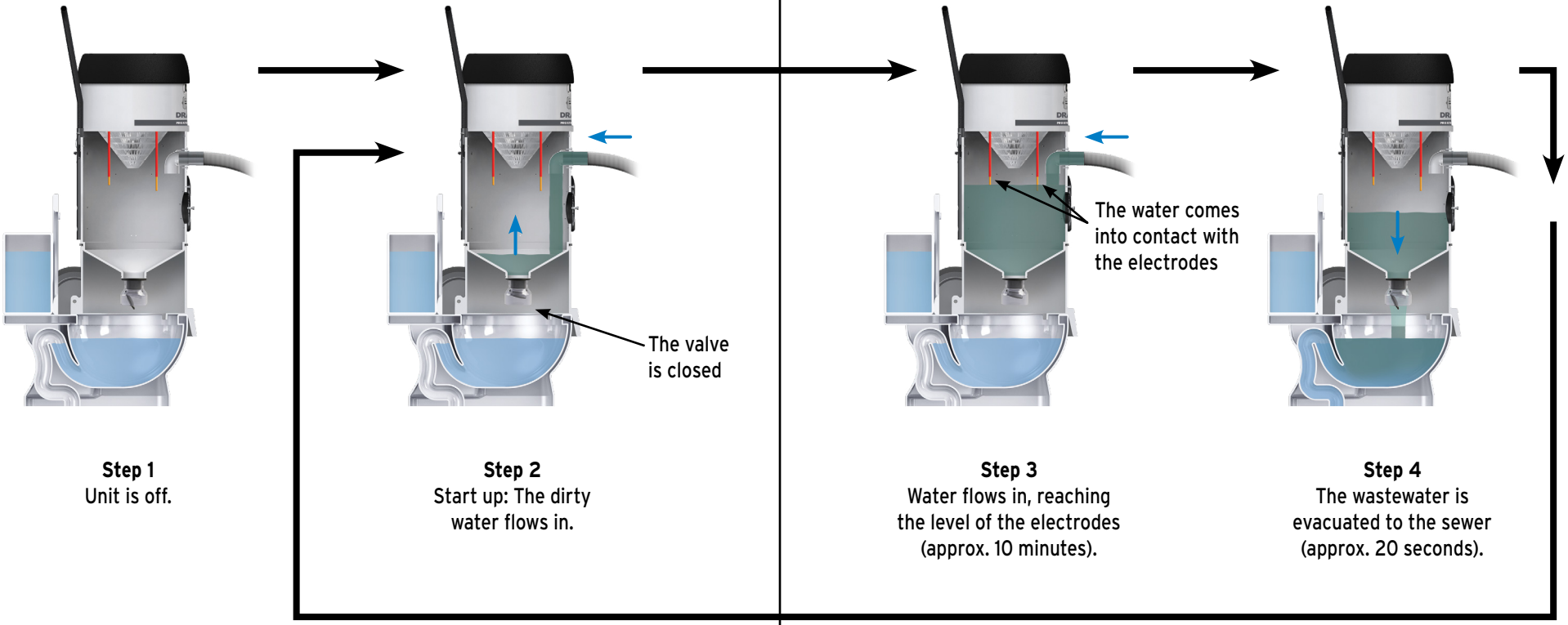

Step 1
Unit is off.

Step 2
Start up: The dirty water flows in.

Step 3
Water flows in, reaching the level of the electrodes (approx. 10 minutes).

Step 4
The wastewater is evacuated to the sewer (approx. 20 seconds).

*The unit can be placed on top of a floor drain, shower or outside (where permitted).

The sensitivity of the electrodes can be modified by the printed circuit board. See Annex for more information.

TECHNICAL SPECIFICATIONS

You have purchased one of the following models. Identify the one to related to it.
The model number appears on the technical label stuck on the left side of the unit.

PROXTRAK

NORTH AMERICA (108V - 120V)

MODELS	HP	H_2O	CFM	DECIBELS	AMPS	CAPACITY	FLOW	SIZE in/cm
DV2P56	4	137	200	72	2 x 13.5	8 imp. gal. (36 L)	15 imp. gal./min. (68 L/min.)	15 dia. x 43 / 38 dia. x 95
DV2P57	2	140	100	66	13.5			

INTERNATIONAL (208V - 230V)

MODELS	HP	mmH_2O	m^3/h	DECIBELS	AMPS	CAPACITY	FLOW	SIZE in/cm
DF2P56	4.1	3683	415	72	14	8 imp. gal. (36 L)	15 imp. gal./min. (68 L/min.)	15 dia. x 43 / 38 dia. x 95
DF2P57	2.42	3605	315	68	7			

UNIT DESCRIPTION

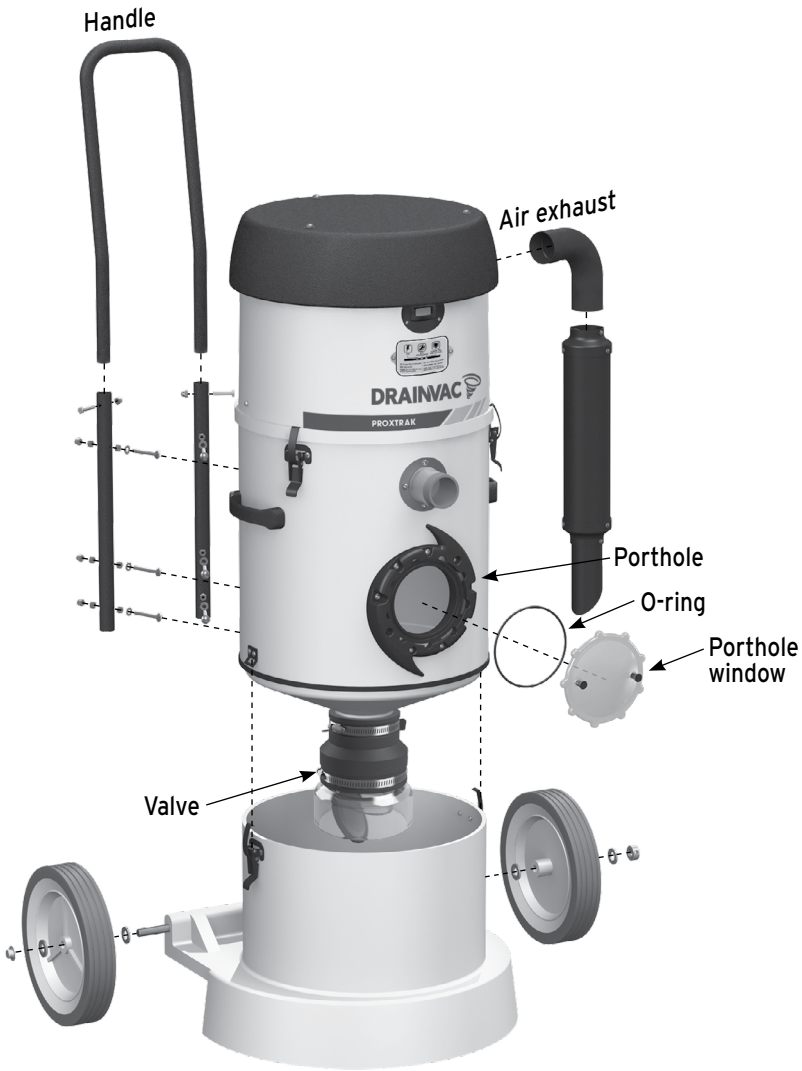

*Your model may vary from the illustrated figure.

OPERATING THE MEMBRANE

As illustrated on pages 6 and 7 of this manual, the ProXtrak system evacuates wastewater automatically when the canister is full. The membrane allows you to adjust the time lapse during which the unit deactivates and empties its content. The unit also clears out the wastewater once the unit stops.

WHY CHANGE THIS PARAMETER?

Adjusting the flushing time is recommended if large amounts of liquid is vacuumed, such as floods. Programming a longer time lapse between flushing time allows the toilet to flush all the liquids before the next cycle.

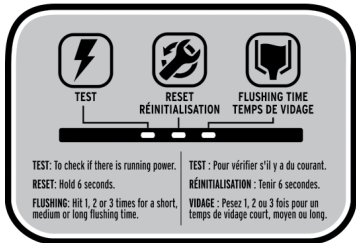

TEST

The first LED will light up when the unit is plugged in, indicating that there is power. By pressing the TEST button, the unit starts up. Press a second time to turn off the unit. In case of troubleshooting, this button allows you to check the unit's status independently from the 24V electrical network.

RESET

The middle LED will light up after 500 hours of usage. This means maintenance is required and the unit should be taken to a Drainvac retailer to be examined. Maintenance should only be reset by a qualified Drainvac technician.

FLUSHING TIME

- Press once to initiate short flushing time - LED will flash once.
  To be used if the unit is placed on the ground outdoors or over a floor drain with no restriction.
- Press twice to initiate medium flushing time - LED will flash twice.
  It's the configuration programed by default.
- Press three times to initiate long flushing time - LED will flash three times.
  To be used if the unit is set on a toilet and more time is needed to let the wastewater evacuate.

HOUR METER

The units are equipped with an hour meter that indicates the length of time the unit has been running. When the unit reaches the 500-hour mark, it is strongly recommended to contact your Drainvac representative or retailer for maintenance purposes.

UNIT INSTALLATION

WHERE TO INSTALL THE UNIT

The liquid extractor is designed to work at a far distance without having to travel back to the unit to empty the soiled liquids.

This unit cleans up liquids and empties itself automatically. Essentially, the unit needs to be located over a suitable dumping point into which liquids can be drained. **The most common dumping points are; toilet bowls, showers, floor drain or anywhere outside (where permitted).**

Find the most central dumping point related to the entire scope of the job to set up the unit. If the job is on multiple levels find the lowest dumping point available.

Open a window in the room where the unit is located to exhaust excess humidity. If located in a bathroom, start ceiling fan.

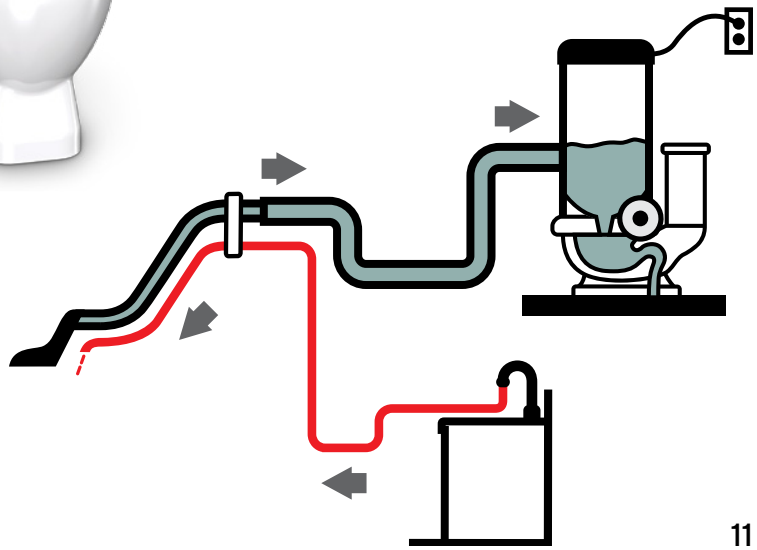

Begin work from the closest point to the unit "X", right or left. Progress away from the unit and add hose lengths as required. When the farthest point is reached, work back towards the unit removing excess hose lengths as you progress back towards the unit. Using this method will keep hoses out of the way. For better hose drainage, lift hose end and keep it elevated as you walk back towards the joint of the hose to be removed.

Once you have finished, rince the vacuum hose with clean water by vacuuming water from a filled sink until unit has filled up and dumped once. While rinsing do not immerge the hose completely. Allow some air in.

Let unit run for 1 to 2 minutes to dry out the accessories and the hose.

Stop unit and leave it in position to let it drip.

After storing the accessories and the hose remove the unit. To avoid dripping on the floor, carry the unit horizontally by tilting it towards you.

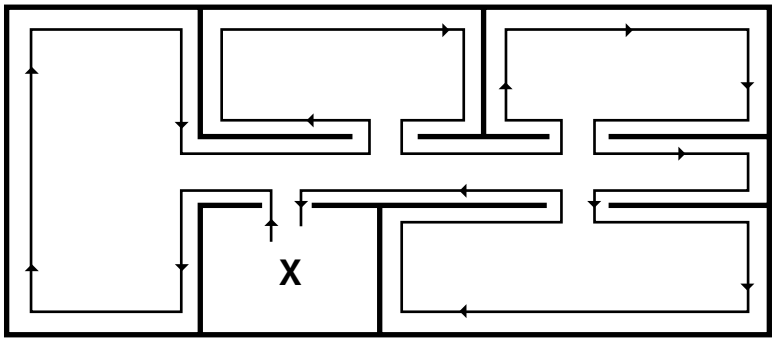

Figure A

The liquid extractor is a plug-in type. Some have up to two (2) motors and each motor has its own electrical plug-in cord.

Each motor must be plugged to a **separate** circuit to prevent breaker overload and power interruption.

DIAGRAMS OF THE APPROPRIATE CONNECTIONS FOR YOUR MODEL

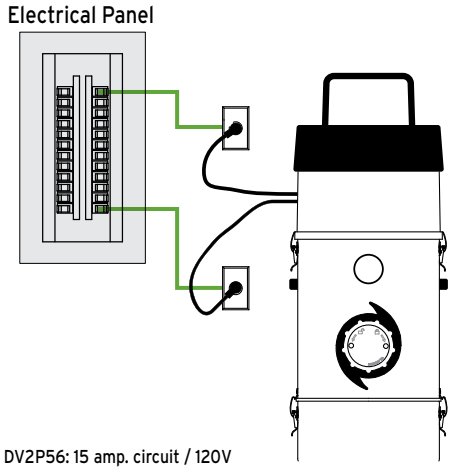

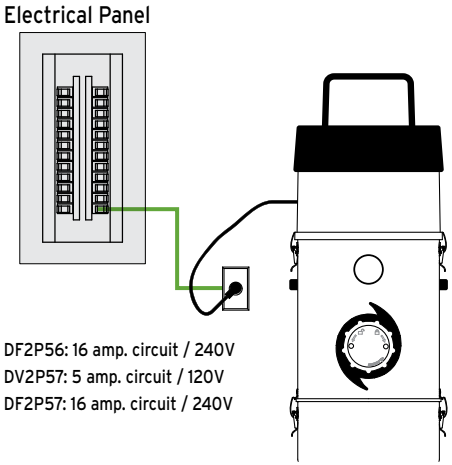

GROUNDING INSTRUCTIONS

These units must be grounded. If it should malfunction or breakdown, grounding provides a path of least resistance for electric current to reduce the risk of electric shock. This appliance is equipped with a cord having an equipment-grounding conductor and grounding plug. The plug must be inserted into an appropriate outlet that is properly installed and grounded in accordance with all local codes and ordinances.

WARNING - Improper connection of the equipment-grounding conductor can result in a risk of electric shock. Check with a qualified electrician or service person if you are in doubt as to whether the outlet is properly grounded.

DO NOT MODIFY THE PLUG PROVIDED WITH THE UNITS.
IF IT DOES NOT FIT THE OUTLET, HAVE A PROPER OUTLET INSTALLED BY A QUALIFIED ELECTRICIAN.

These units are for use on a nominal 120V or a 230V circuit and have a grounding attachment plug that looks like the one illustrated below. Make sure that the electrical cord is connected to an outlet having the same configuration as the plug.

NO ADAPTOR SHOULD BE USED WITH THIS APPLIANCE.

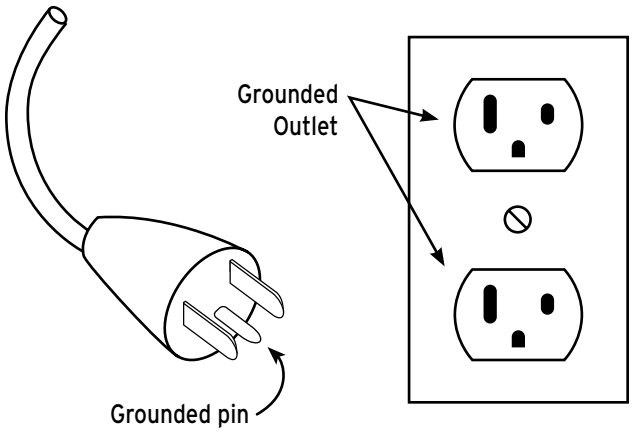

*Illustration of a north-americain electrical outlet

MAINTENANCE PROCEDURES

Each system requires a minimum maintenance, without any exception.

MOTOR BRUSHES

Beyond the occasional external cleaning, we recommend that you **inspect your motor brushes after 500 hours of use** to check how worn they are and have them replaced if necessary. When the time comes, contact your retailer or distributor for this maintenance procedure. Take note that the motor brushes are not included in the warranty.

VISUAL INSPECTION

Your ProXtrak system is very user-friendly and **we recommend a visual inspection through the porthole once a year or when needed**. If you wish to clean the inside of the unit, refer to the following section "Regular Maintenance".

REGULAR MAINTENANCE

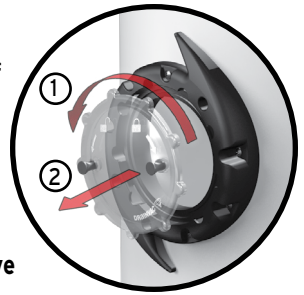

The only maintenance required is cleaning the inside of the unit.

To proceed, you just have to remove the porthole glass as illustrated, by pivoting it in an anti-clockwise motion using the handles.

Use a scouring sponge to **especially clean the protective screen, the two electrodes** and, if needed, the tank.

A blocked protective screen could reduce the unit's performance and dirty electrodes could not adequately send a signal to the unit to pass on to the wastewater evacuation cycle.

At the same time, it is recommended to **visually inspect** the water inlet pipe and the valve to make sure that no foreign object is obstructing the water flow.

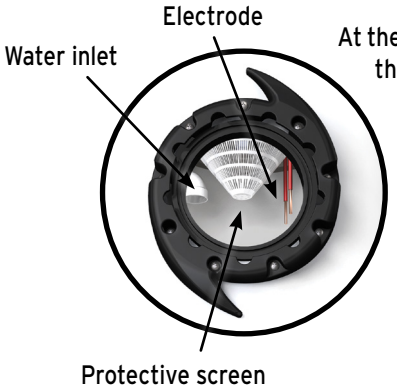

This unit complies with the **WEEE (Waste Electrical and Electronic Equipment) Guidelines**, which promotes the recycling of this type of waste equipment and encourage the development of products that are adapted to efficient waste reclamation at the end of their life cycle.

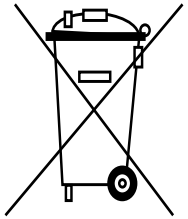

Figure B

The WEEE Guidelines stipulate that the original supplier should agree to reclaim any obsolete equipment free of charge. We recommend that you advise your supplier that you would like him to reclaim your unit when you order and replace it with a new one.

Do not discard the unit with your regular garbage. The symbol representing a garbage bin on wheels on the unit's label **(Figure B)** attests to this requirement. You must ensure that, at the end of its life cycle, your unit is reclaimed, treated and recycled by an authorized retailer or firm.

For more information, contact your municipal waste management department.

RoHS

All presented units respect the European directive RoHS which limits the usage of six dangerous substances.

SUPPORT

If you wish to speak with a customer service representative, please contact your supplier/dealer.

To find a retailer near you, please visit our website:
www.drainvac.com/retailers.html

THE UNIT WON'T START UP ...

SOLUTION:

1. Check fuse(s).
2. For units with more than 1 motor, inverse plug-in cords.
3. Check if the motor brushes are worn out or defective.

INSUFFICIENT VACUUM ...

SOLUTION:

1. Remove vacuum hose and start unit. If the succion is good at the unit, the vacuum hose is blocked. Unblock by reversing hose inlet and outlet.
2. If vacuum is not good, check valve and motor blades. They might be damaged or dirty.
3. Check if the valve is defective.

WATER COMING OUT OF THE MOTORS / UNIT WILL NOT STOP...

SOLUTION:

1. Check if the liquid level probes are dirty.
2. Check if the water is too soft.
3. Contact us.

Drainvac International
150 Brunet Street, Mont-St-Hilaire, QC J3H 0M6, Canada

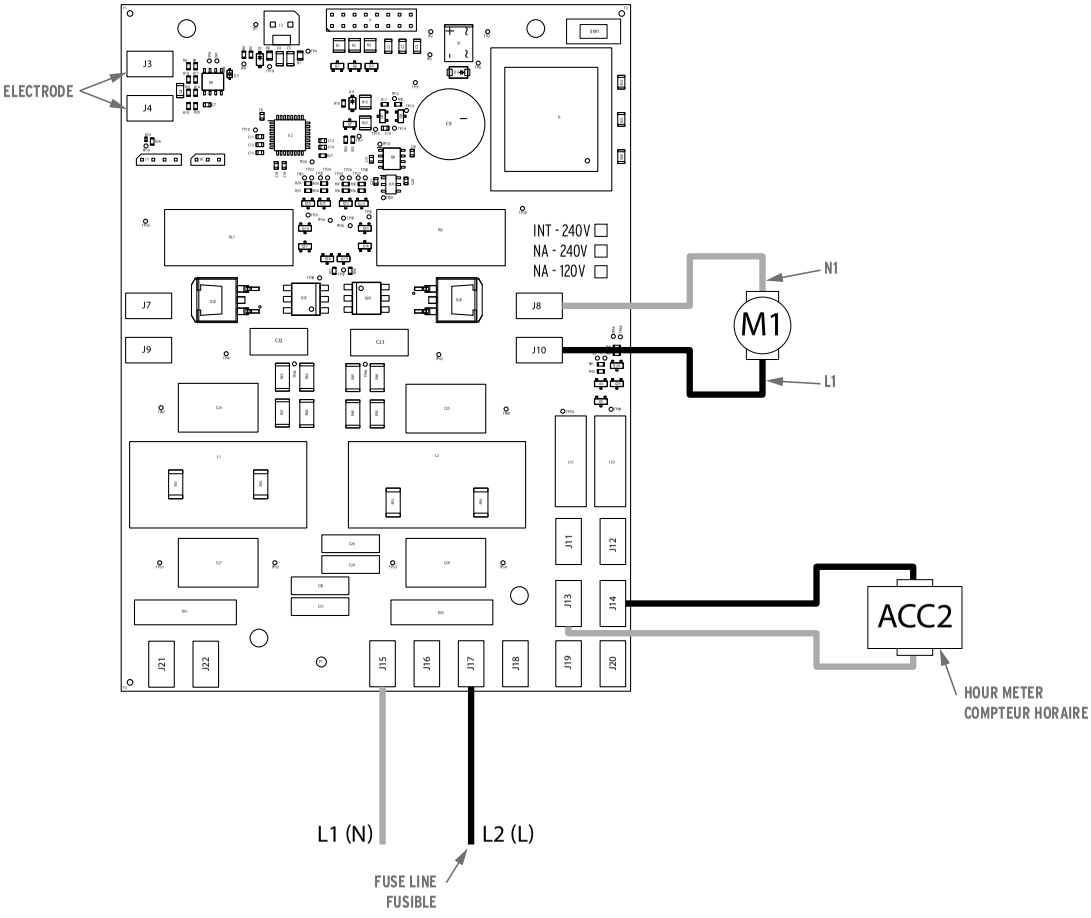

ANNEXE I
CIRC14R5NA1
DIAGRAMME DE CONNEXIONS
DV2P57, DF2P57

ANNEX I
CIRC14R5NA1
CONNECTION DIAGRAM
DV2P57, DF2P57

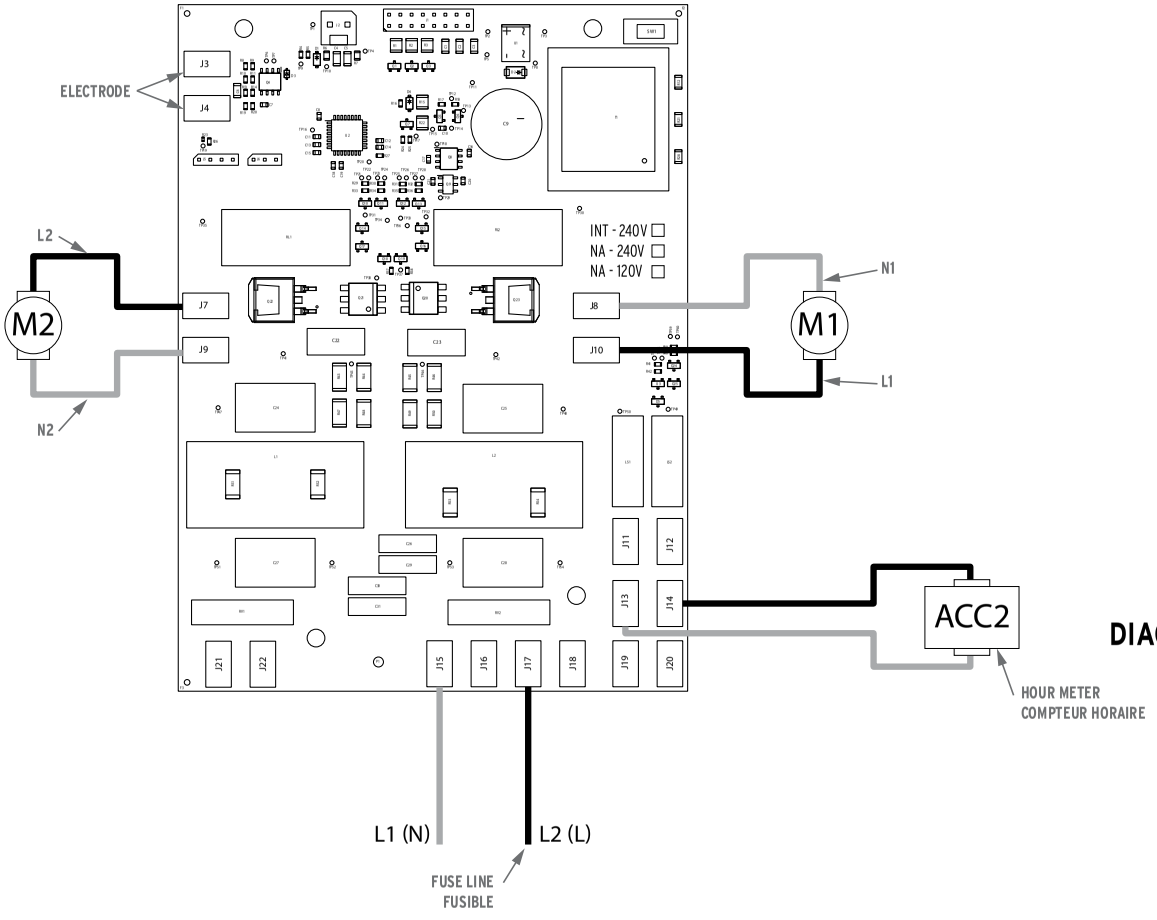

ANNEXE III
CIRC14R5INT
DIAGRAMME DE CONNEXIONS
220-240 VOLTS
DF2P56

ANNEX III
CIRC14R5INT
CONNECTION DIAGRAM
220-240 VOLTS
DF2P56

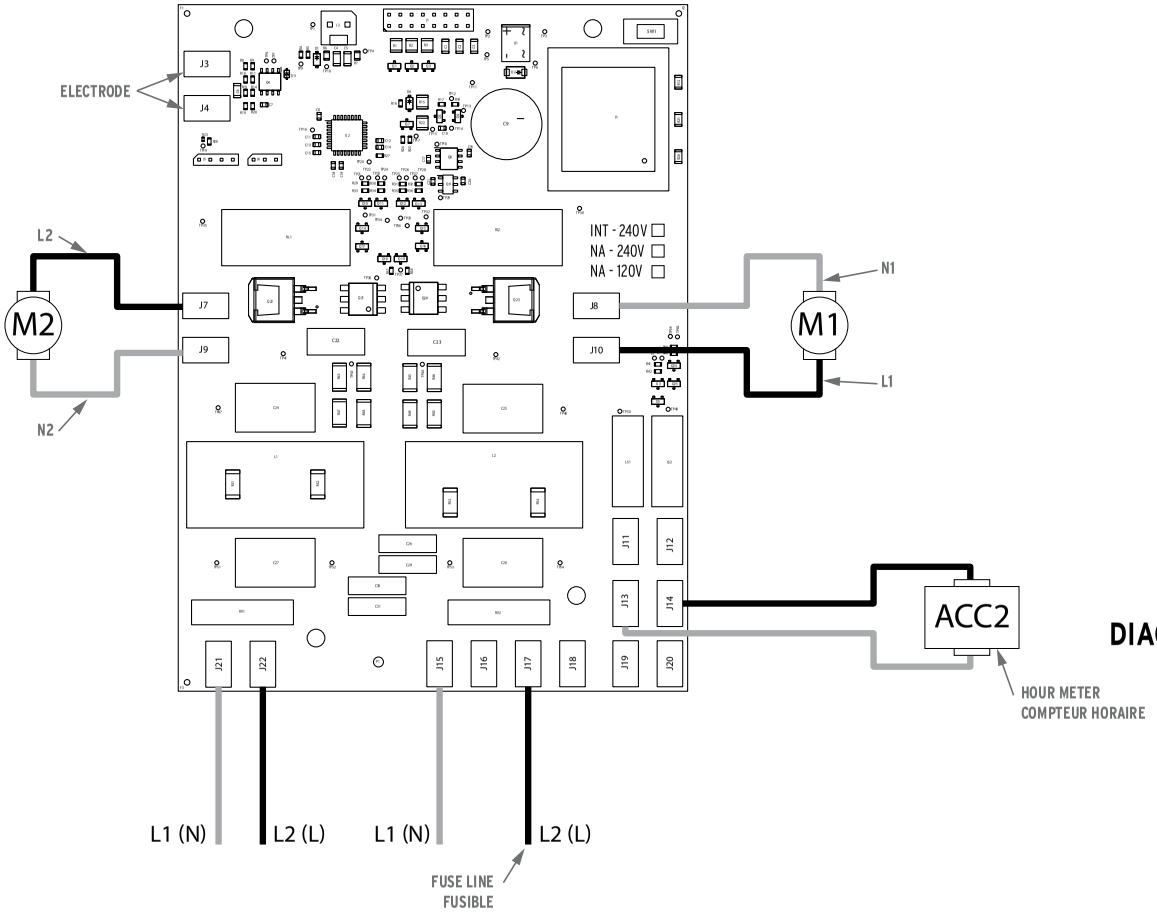

ANNEXE II
CIRC14R5NA1
DIAGRAMME DE CONNEXIONS
108-120 VOLTS
DV2P56

ANNEX II
CIRC14R5NA1
CONNECTION DIAGRAM
108-120 VOLTS
DV2P56